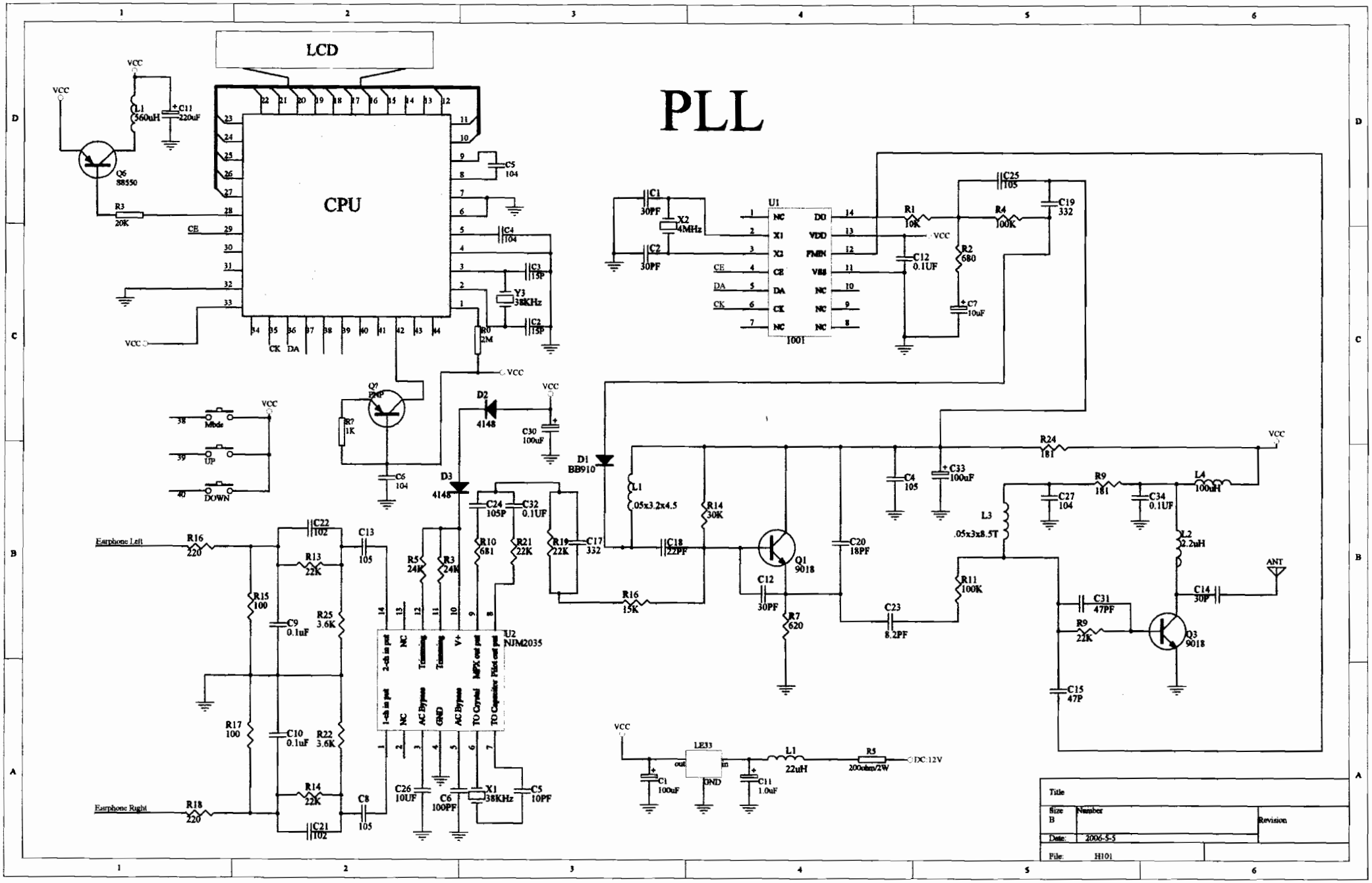
PLL
LCD
CPU
U1
1001
U2
NJM2035
Q1
9018
Q3
9018
Q6
S8550
Q7
PNP
D1
BB910
D2
4148
D3
4148
LE33
ANT
DC 12V
Earphone Left
Earphone Right
Mode
UP
DOWN
VCC
CE
DA
CK
Title
Size
B
Number
Revision
Date:
2006-5-5
File:
H101