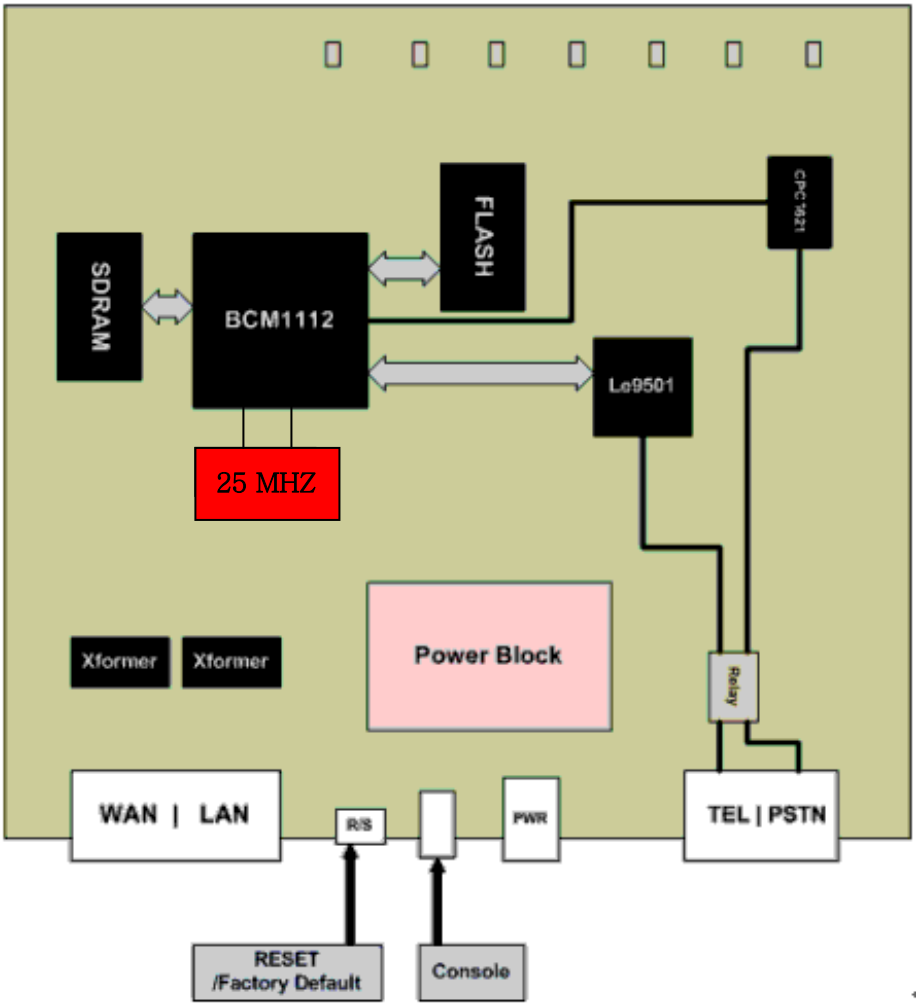
SDRAM
BCM1112
FLASH
CPC1621
Le9501
25 MHZ
Power Block
Xformer
Xformer
Relay
WAN | LAN
R/S
PWR
TEL | PSTN
RESET
/Factory Default
Console