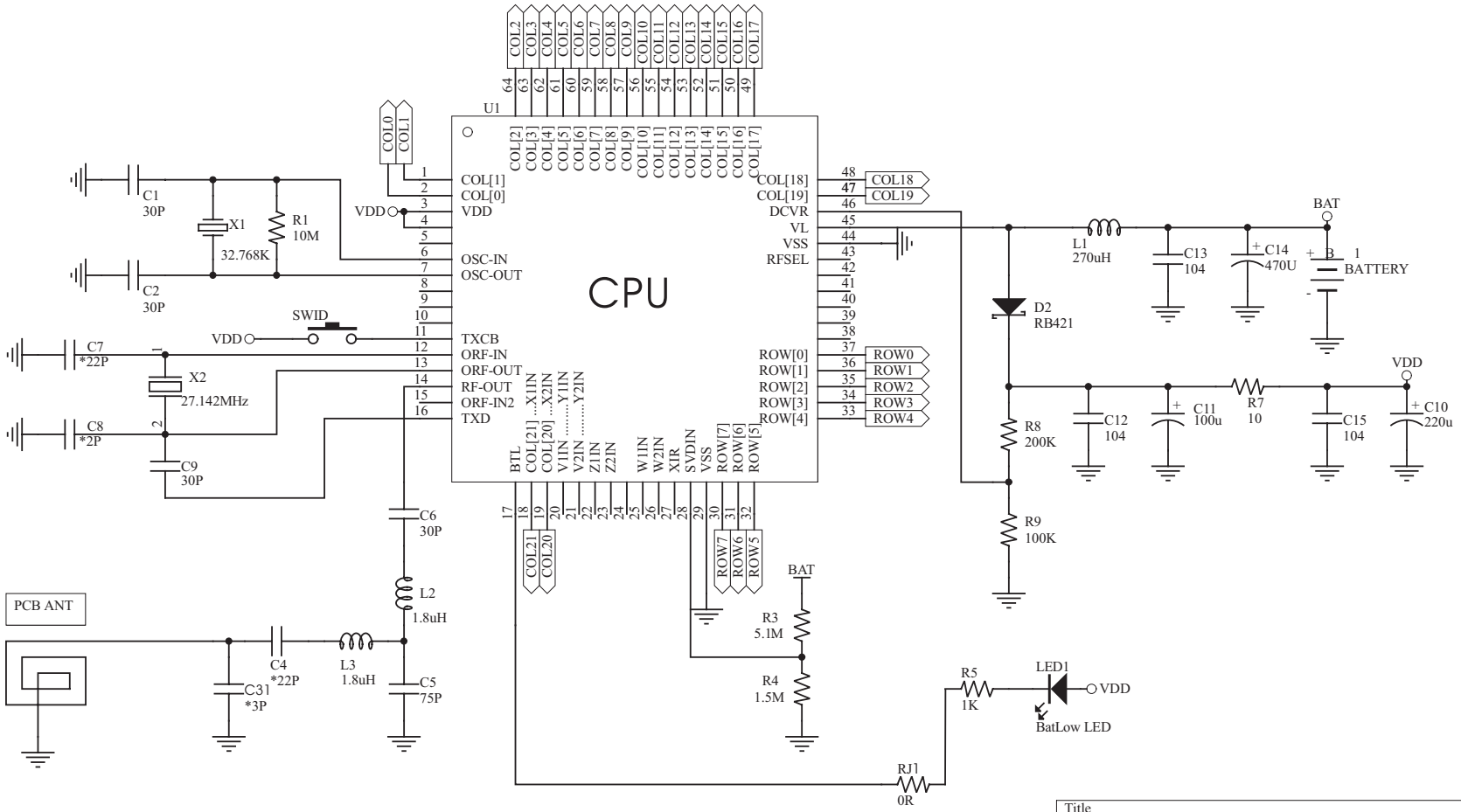

Title	GL-208UMRF SCHAMATIC	
Size A4	Number	Revision V1.0
Date: 26-Feb-2006		Sheet of
File:		Drawn By: Lewis