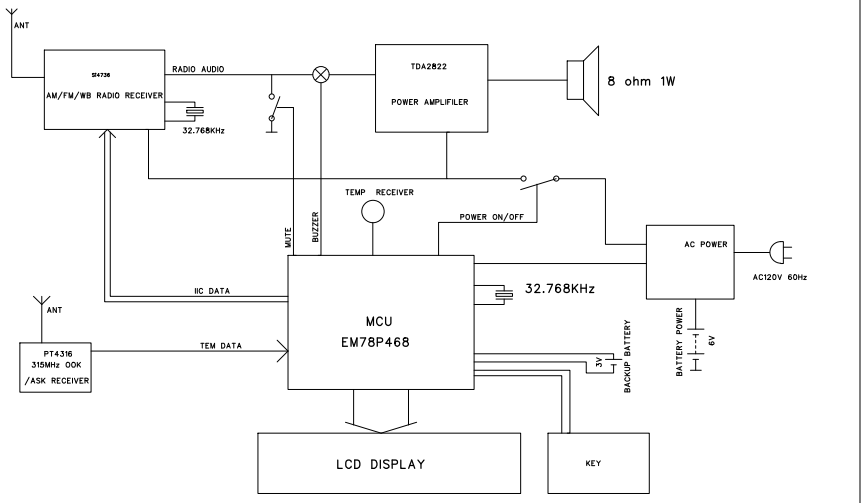

SHENZHEN ZOWEE TECHNOLOGY CO., LTD			
SYSTEM BLOCK DIAGRAM		DWG NO:	SHEET 1 / 1
		MODEL: ZW-PT09	SIZE: A4
CLIENT:		PRODUCT : CLOCK WITH AM/FM/WB/TEM	
ID :		DRG:	
FILE :		CHECK:	
REV:	DATE:2008_12_10	APPROVED:	

Si4736/37/38/39-B20

BROADCAST WEATHER BAND RADIO RECEIVER

Features

- NOAA weather band support (162.4–162.55 MHz)
- Worldwide FM band support (76–108 MHz)
- Worldwide AM band support (520–1710 kHz) (Si4736/37 only)
- 1050 Hz alert tone detection
- Excellent real-world performance
- Freq synthesizer with integrated VCO
- Advanced AM/FM seek tuning
- Automatic frequency control (AFC)
- Automatic gain control (AGC)
- Integrated LDO regulator
- Digital FM stereo decoder
- Programmable de-emphasis
- Adaptive noise suppression
- AM/FM/WB digital tuning
- EN55020 compliant
- No manual alignment necessary
- Programmable reference clock
- Volume control
- Programmable soft mute control
- RDS/RBDS processor (Si4737/39 only)
- Optional digital audio output (Si47/39 only)
- Optional digital audio output (Si4737/39 only)
- 2-wire and 3-wire control interface
- 2.7 to 5.5 V supply voltage
- Firmware upgradeable
- 3 x 3 x 0.55 mm 20-pin QFN package
  - Pb-free/RoHS compliant

Applications

- Emergency radios
- Table and portable radios
- Stereos
- Mini/micro systems
- Portable media players
- Boom boxes
- Cellular handsets
- Modules
- Clock radios
- Mini HiFi

Description

The Si4736/37/38/39 is the first digital CMOS AM/FM/WB radio receiver IC that integrates the complete tuner function from antenna input to audio output.

Functional Block Diagram

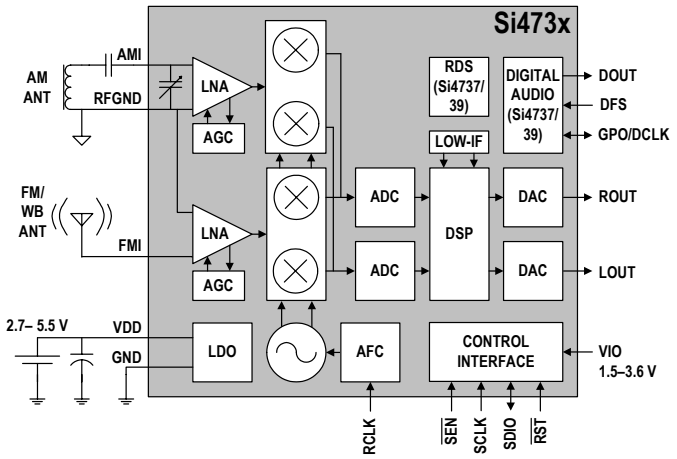

Ordering Information:
See page 31.

Pin Assignments

Si4736/37/38/39-GM
(Top View)

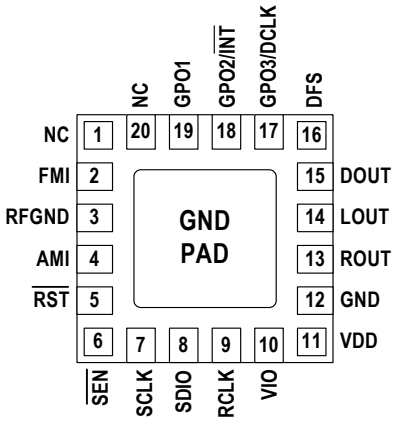

Patents pending

Notes:

1. To ensure proper operation and receiver performance, follow the guidelines in “AN383: Universal Antenna Selection and Layout Guidelines.” Silicon Laboratories will evaluate schematics and layouts for qualified customers.
2. Place Si4736/37/38/39 as close as possible to antenna jack and keep the FMI and AMI traces as short as possible.

 Copyright © 2007 by Silicon Laboratories

This information applies to a product under development. Its characteristics and specifications are subject to change without notice.
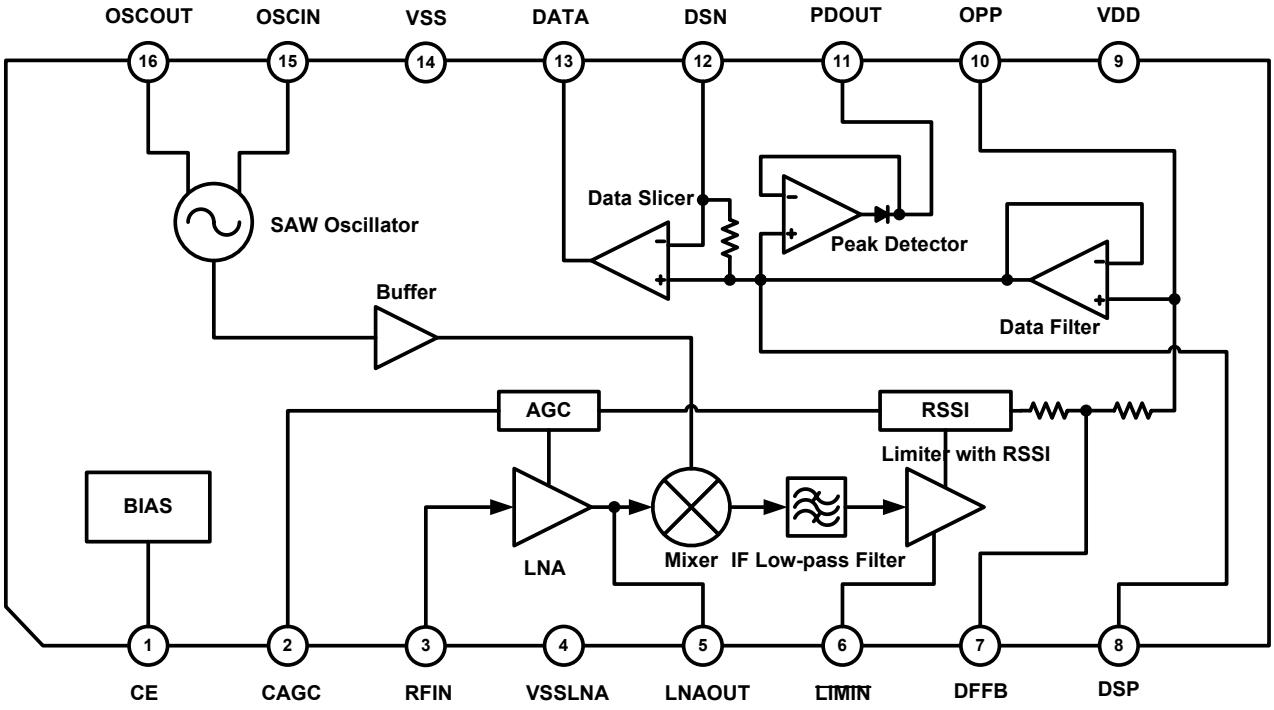
BLOCK DIAGRAM