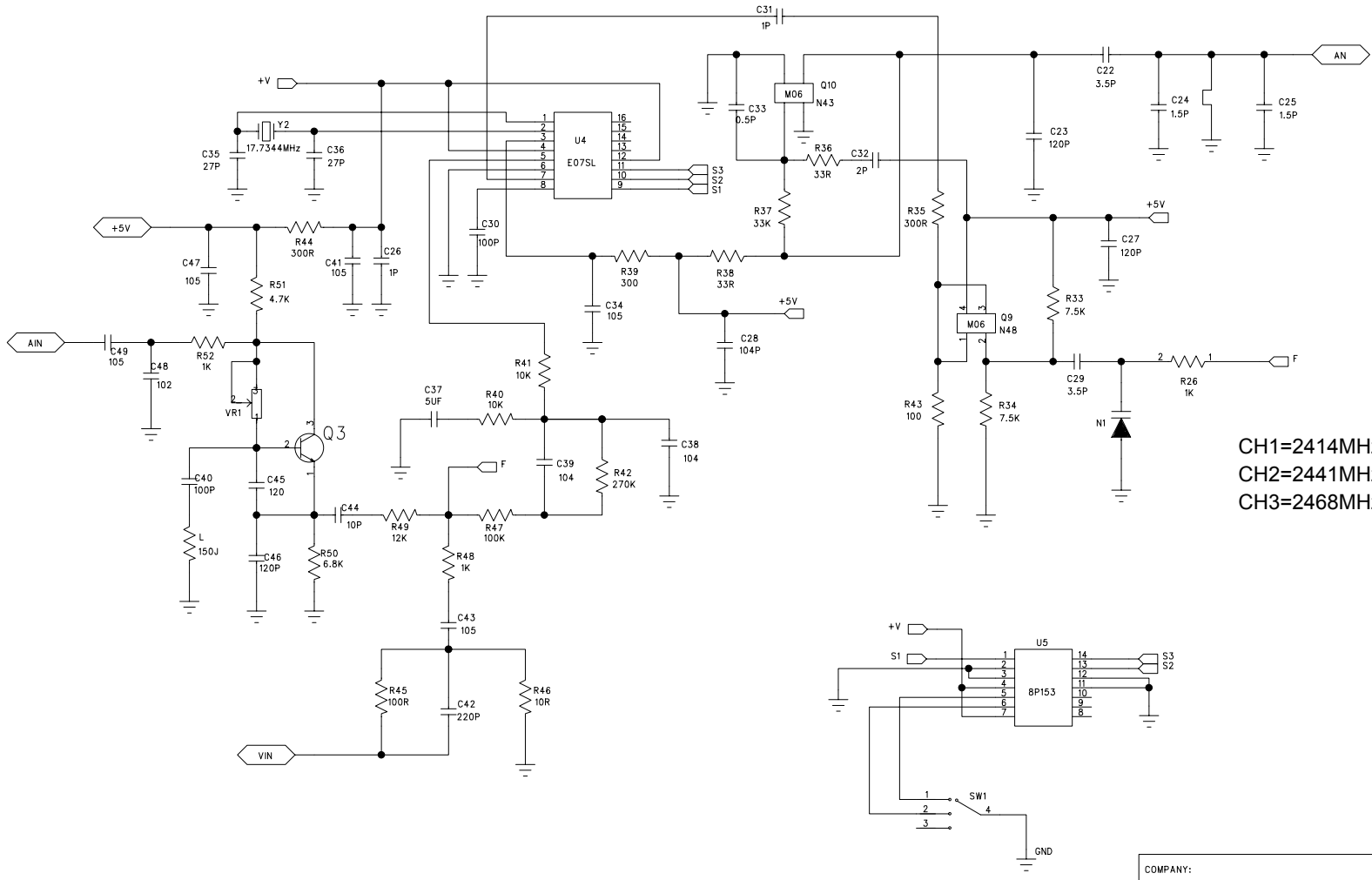

APPLICANT: ANJIELUN ELECTRONIC TECHNOLOGY LIMITED.

FCC ID: T54AJLSB001

COMPANY:		
TITLE: SB0001TX		
DRAWN:	DATED: 060328	
CHECKED:	DATED:	
REV:	SIZE: A3	SHEET: 2 OF 2