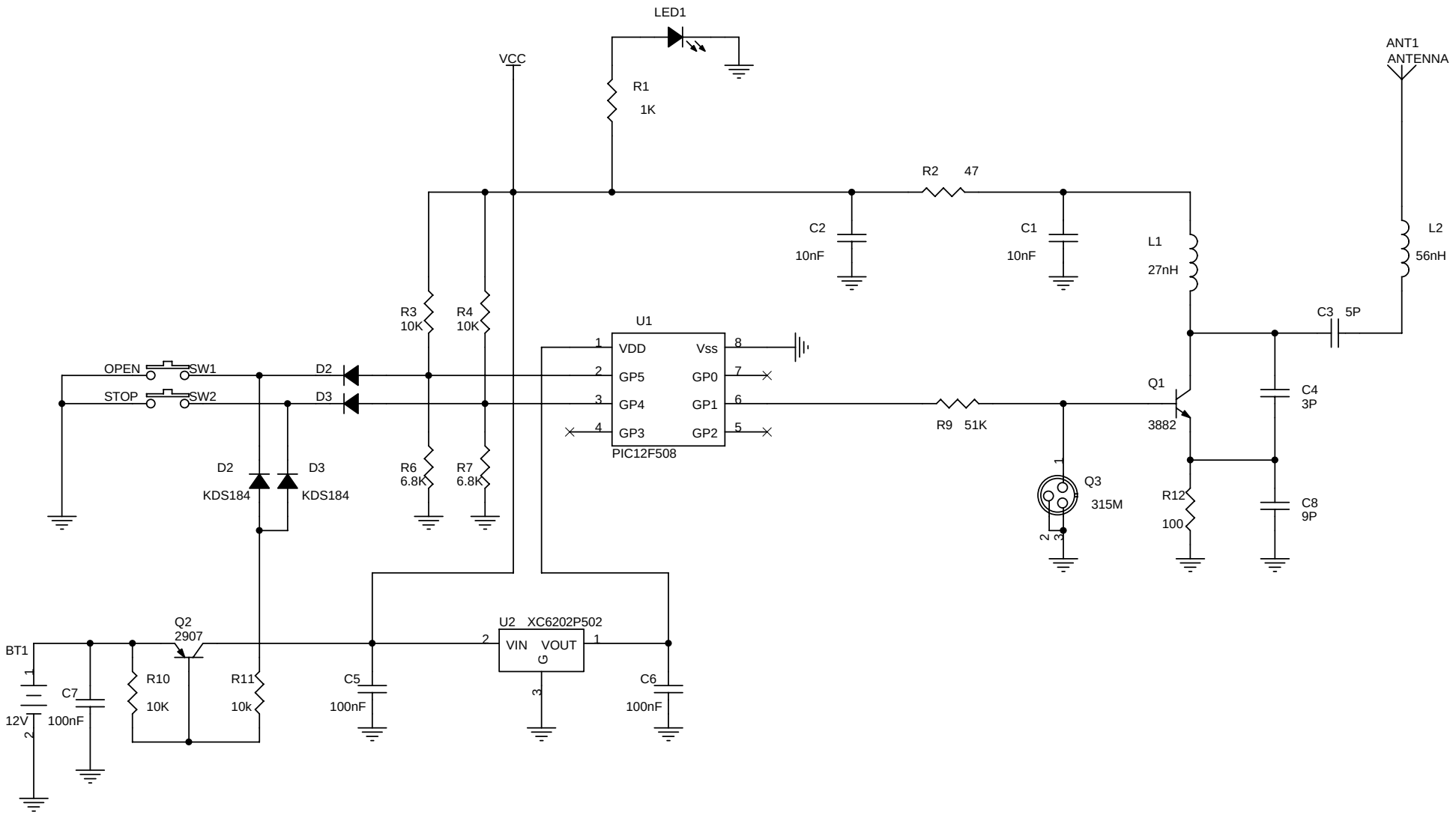

작성자 : 지창선

Title	RF S.C.U	
Size A4	Document Number CSR-1100T / RUNT-C310T	Rev 1.4
Date: Monday, March 06, 2006	Sheet 0 of 4	