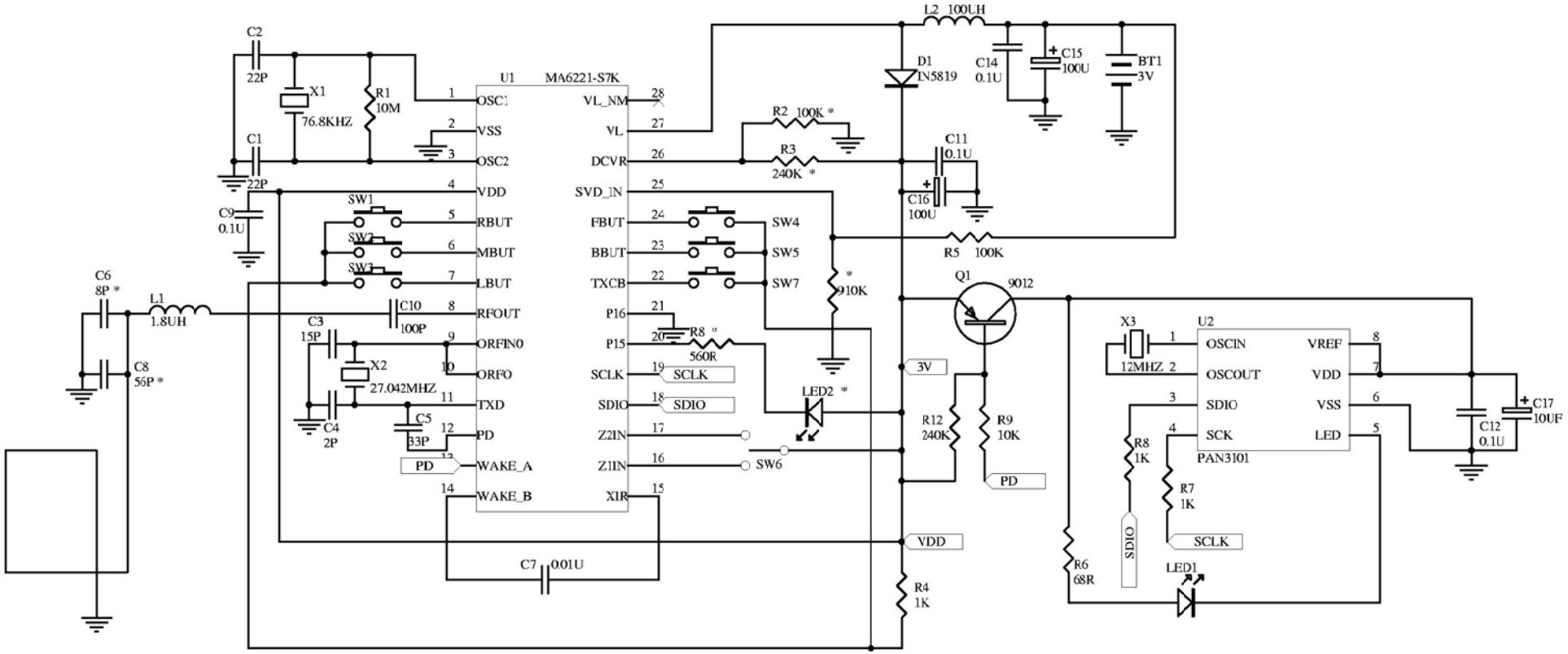

Title	MD8356		
Size A4	Number AP0097		Revision 01
Date: 29-Jan-2007		Sheet of	1 of 1
File: E:\福永办公室\电子\MD8356\MyDesign.ddb		Drawn By:	李昌勇