	L1	L2	L3	L4	C5	C6	C8	C9	Y1
27mHZ	3.3uh	5.6uh	3.3uh	15T	68p	470p	100p	33p	27.145MHZ
49mHZ	1uh	1uh	1uh	8T	56P	300P	100P	cancel	49.860MHZ

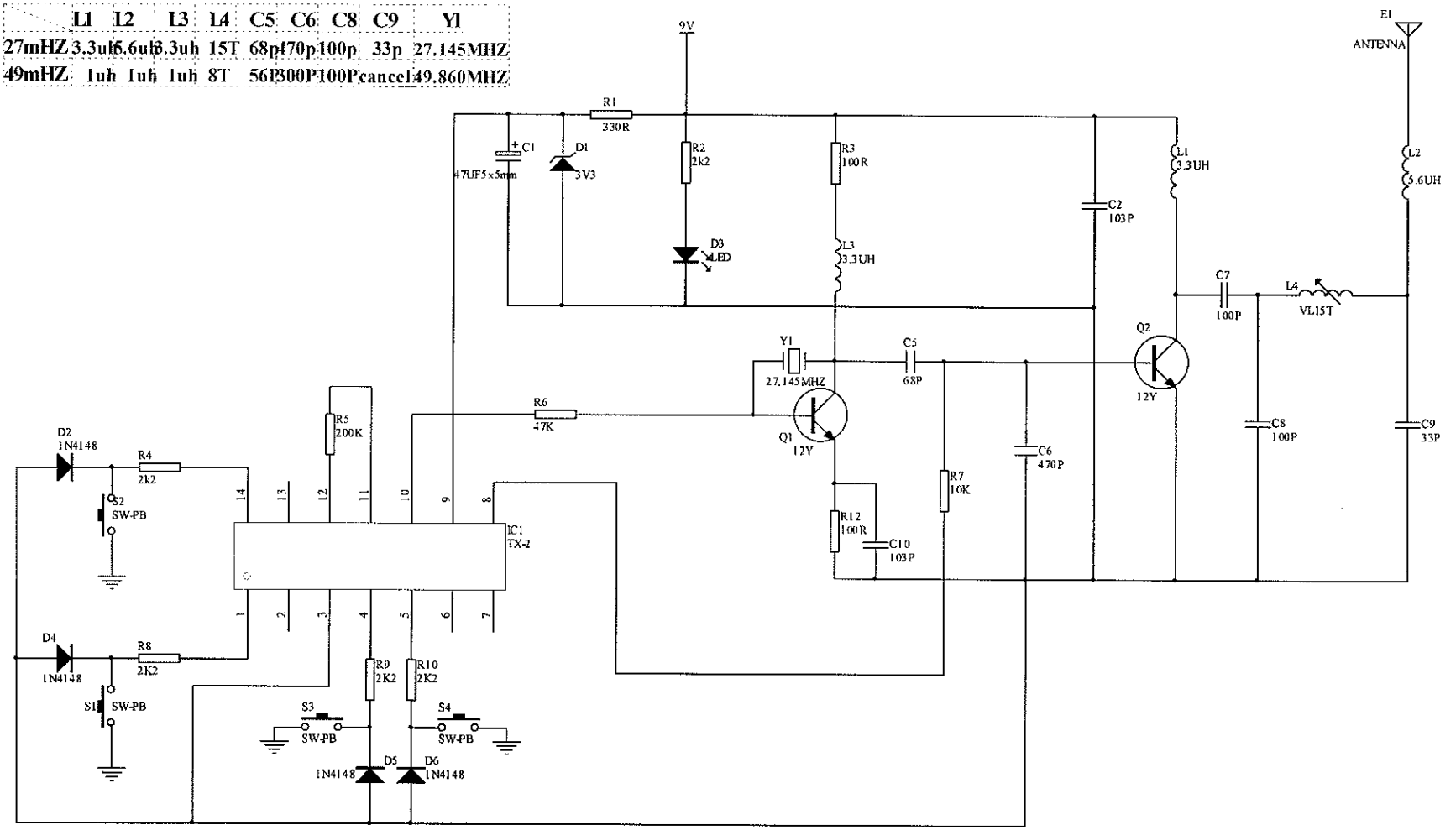

Title	Odd with Ouiboard	
Size A4	Number 90491	Revision 2V1
Date: 16-Jan-2006	Sheet of	
File: C:\Documents and Settings\Wong Alan\My Documents\P12A27~14.DDB		