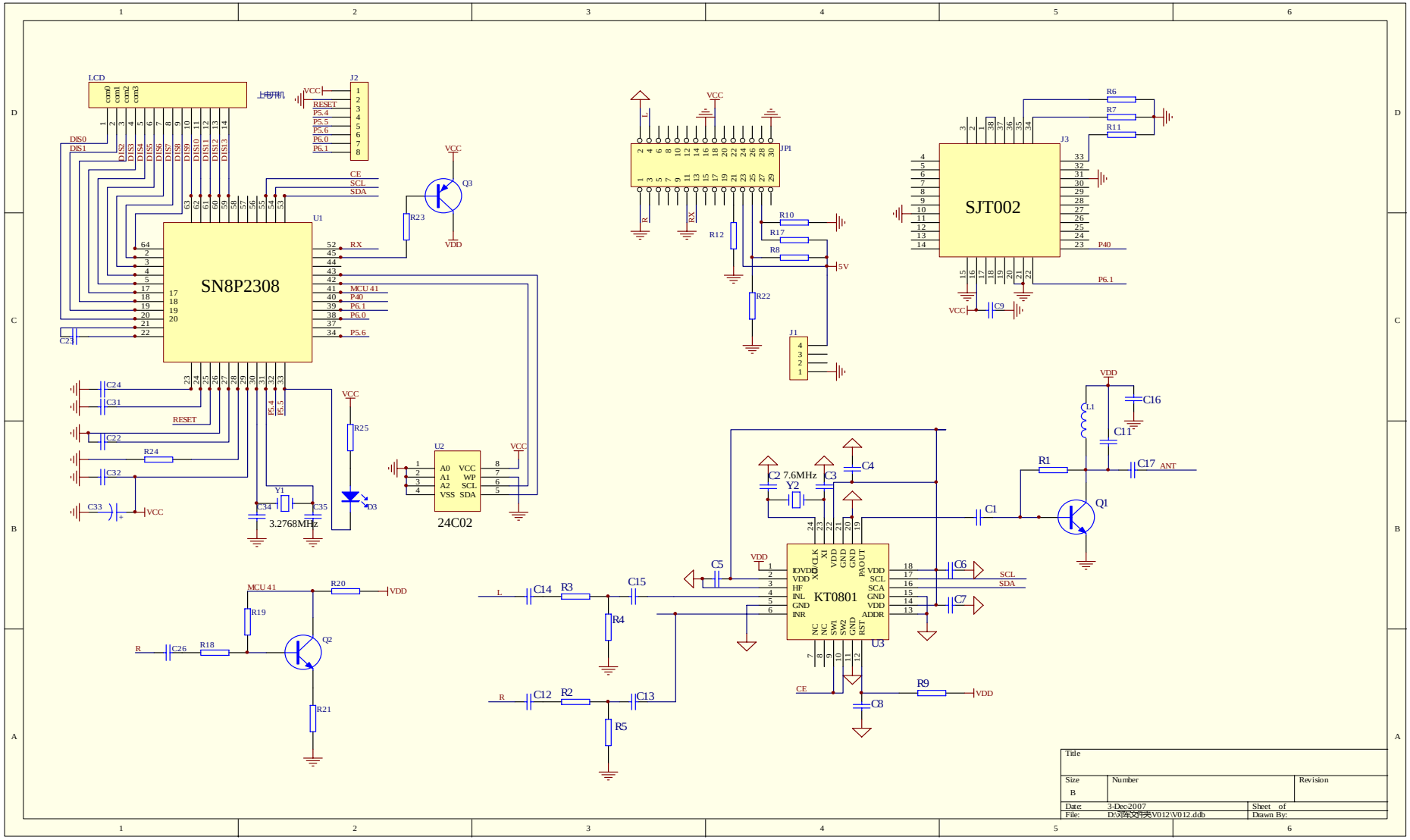
LCD
上电开机
J2
U1
SN8P2308
Q3
R23
VDD
VCC
RESET
CE
SCL
SDA
RX
MCU 41
P40
P6.1
P6.0
P5.6
P5.4
P5.5
DIS0
DIS1
C23
C24
C31
C22
R24
C32
C33
R25
D3
Y1
3.2768MHz
C34
C35
U2
A0
A1
A2
VSS
VCC
WP
SCL
SDA
24C02
JP1
R
RX
R12
R10
R17
R8
5V
R22
J1
SJT002
J3
R6
R7
R11
C9
C2
7.6MHz
Y2
C3
C4
C1
R1
L1
C16
C11
C17
ANT
Q1
C5
C6
C7
C8
R9
KT0801
U3
IOVDD
VDD
HF
INL
GND
INR
XCLK
XI
VDD
GND
GND
PAOUT
VDD
SCL
SCA
GND
VDD
ADDR
NC
NC
SW1
SW2
GND
RST
C14
R3
C15
R4
C12
R2
C13
R5
MCU 41
R20
R19
Q2
R18
C26
R21
Title
Size
B
Number
Revision
Date: 3-Dec-2007
File: D:\项目文件\V012\V012.ddb
Sheet of
Drawn By: