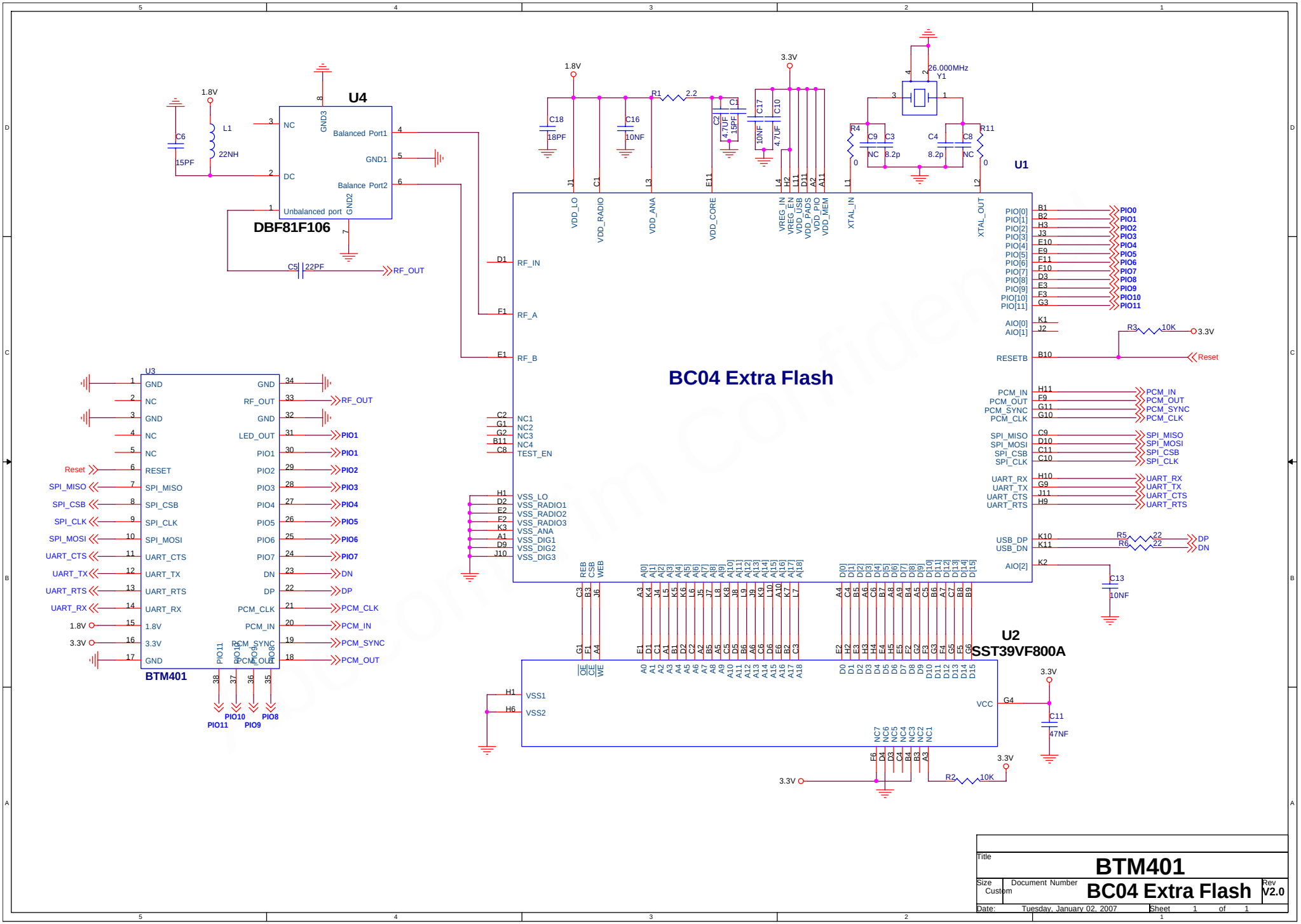
U4
DBF81F106
Balanced Port1
Balance Port2
Unbalanced port
NC
DC
GND1
GND2
GND3
1.8V
L1
22NH
C6
15PF
C5
22PF
RF_OUT
U1
BC04 Extra Flash
RF_IN
RF_A
RF_B
NC1
NC2
NC3
NC4
TEST_EN
VSS_LO
VSS_RADIO1
VSS_RADIO2
VSS_RADIO3
VSS_ANA
VSS_DIG1
VSS_DIG2
VSS_DIG3
VDD_LO
VDD_RADIO
VDD_ANA
VDD_CORE
VREG_IN
VREG_EN
VDD_USB
VDD_PADS
VDD_PIO
VDD_MEM
XTAL_IN
XTAL_OUT
PIO[0]
PIO[1]
PIO[2]
PIO[3]
PIO[4]
PIO[5]
PIO[6]
PIO[7]
PIO[8]
PIO[9]
PIO[10]
PIO[11]
AIO[0]
AIO[1]
AIO[2]
RESETB
Reset
PCM_IN
PCM_OUT
PCM_SYNC
PCM_CLK
SPI_MISO
SPI_MOSI
SPI_CSB
SPI_CLK
UART_RX
UART_TX
UART_CTS
UART_RTS
USB_DP
USB_DN
DP
DN
R1
2.2
C18
18PF
C16
10NF
C1
C2
4.7UF
15PF
C17
10NF
C10
4.7UF
3.3V
26.000MHz
Y1
R4
C9
NC
C3
8.2p
C4
8.2p
C8
NC
R11
0
R3
10K
C13
10NF
U3
BTM401
GND
NC
RESET
SPI_MISO
SPI_CSB
SPI_CLK
SPI_MOSI
UART_CTS
UART_TX
UART_RTS
UART_RX
1.8V
3.3V
RF_OUT
LED_OUT
PIO1
PIO2
PIO3
PIO4
PIO5
PIO6
PIO7
DN
DP
PCM_CLK
PCM_IN
PCM_SYNC
PCM_OUT
PIO10
PIO8
PIO11
PIO9
U2
SST39VF800A
VSS1
VSS2
VCC
C11
47NF
R2
10K
Title
BTM401
Size
Custom
Document Number
BC04 Extra Flash
Rev
V2.0
Date:
Tuesday, January 02, 2007
Sheet
1
of
1