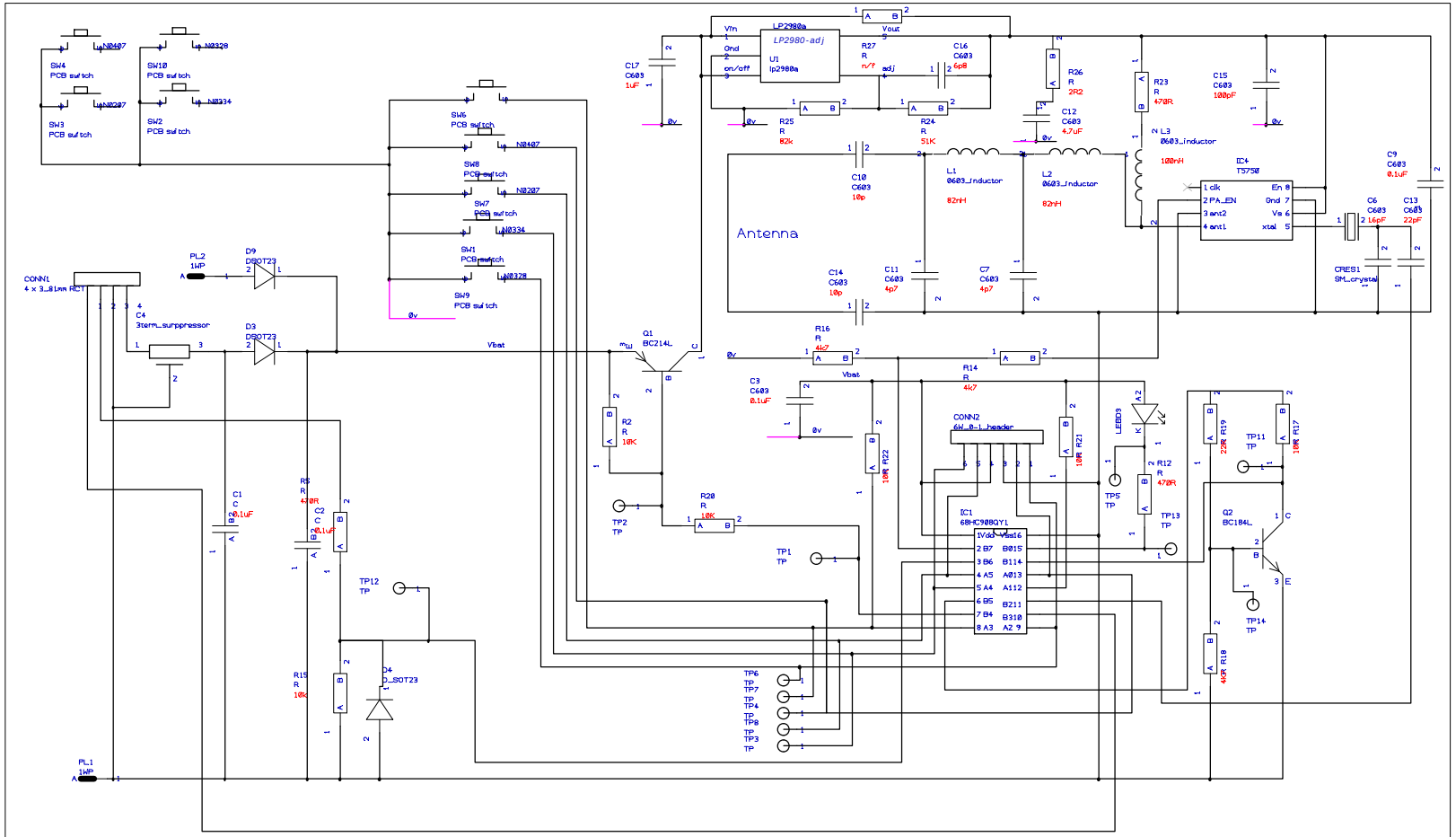

COPYRIGHT

This drawing or design is confidential and is released on condition that it will not be lent copied replaced or otherwise be disclosed to any third party without the prior consent of Controlled Speed Eng Ltd

Date: 03-02-2005	Scale: DNS	
Drawn by: A Hurst	Title: ATMEL Radio Transmitter	
File Name: CSE035_03_02_05	Issue No	

CSE
driving technology forward

Controlled Speed Engineering Ltd
St Pegs House
Thornhill Beck Lane
Brighouse
West Yorkshire
HD6 4AH
Tel (01484) 721981
Fax (01484) 721984