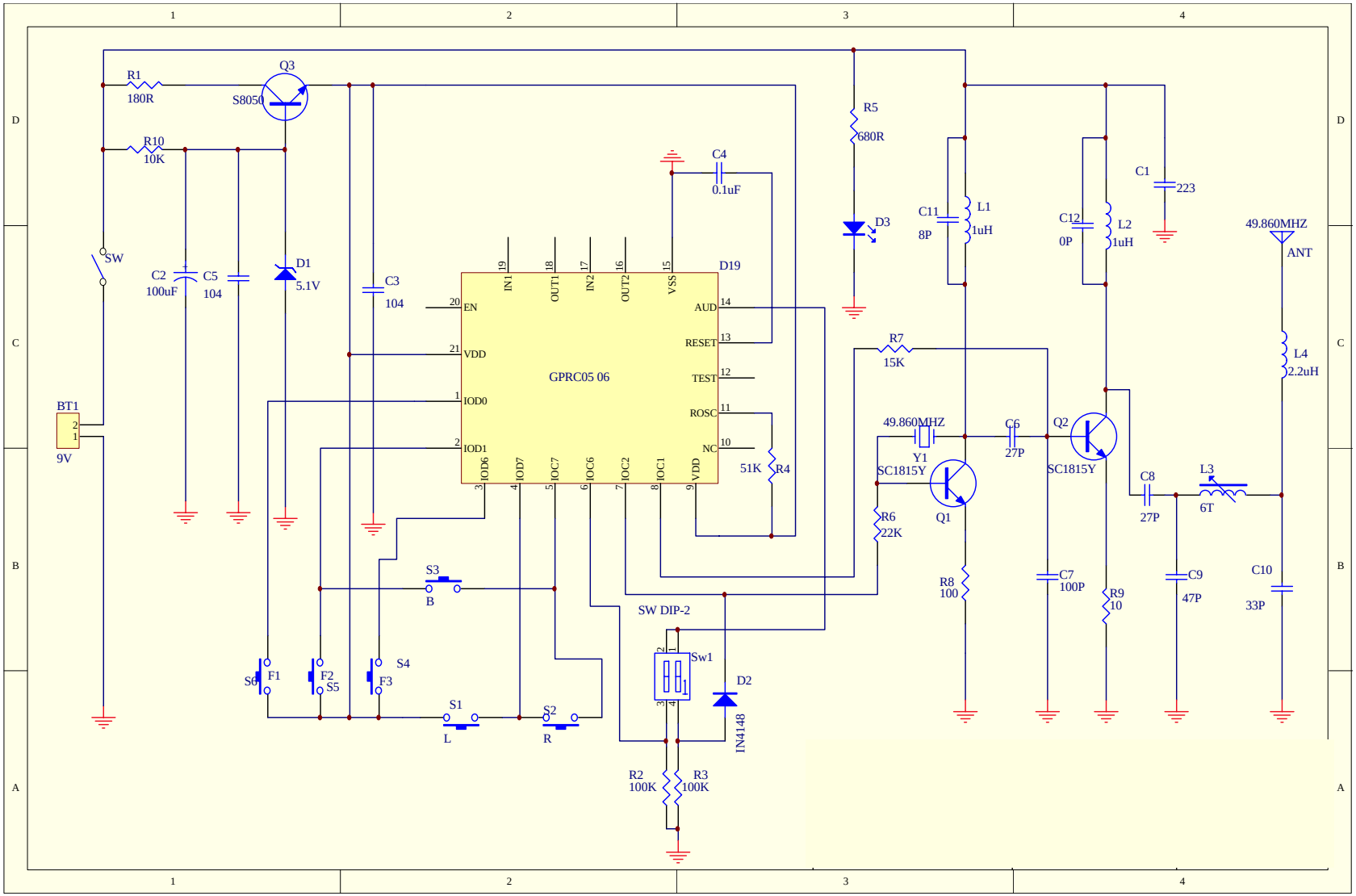Schematic Circuit Diagram