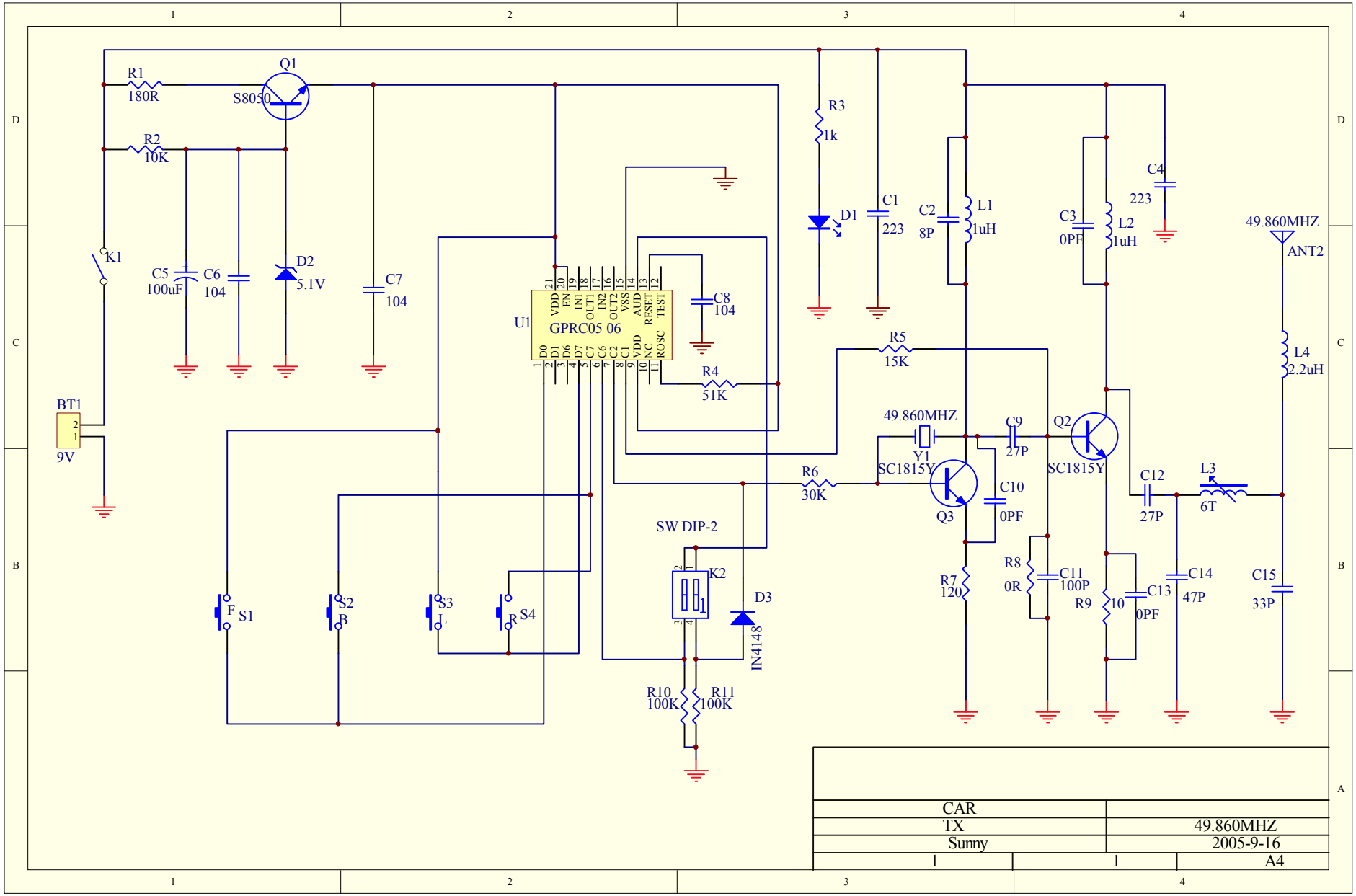
R1
180R
Q1
S8050
R2
10K
K1
C5
100uF
C6
104
D2
5.1V
C7
104
U1
GPRC05 06
VDD
EN
IN1
OUT1
IN2
OUT2
VSS
AUD
RESET
TEST
D0
D1
D6
D7
C7
C6
C2
C1
VDD
NC
ROSC
C8
104
R4
51K
R3
1k
D1
C1
223
C2
8P
L1
1uH
C3
0PF
L2
1uH
C4
223
49.860MHZ
ANT2
L4
2.2uH
R5
15K
BT1
9V
49.860MHZ
Y1
SC1815Y
Q3
C9
27P
C10
0PF
Q2
SC1815Y
R6
30K
C12
27P
L3
6T
SW DIP-2
K2
D3
IN4148
R10
100K
R11
100K
R7
120
R8
0R
C11
100P
R9
10
C13
0PF
C14
47P
C15
33P
F
S1
B
S2
L
S3
R
S4
CAR
TX
49.860MHZ
Sunny
2005-9-16
1
1
A4