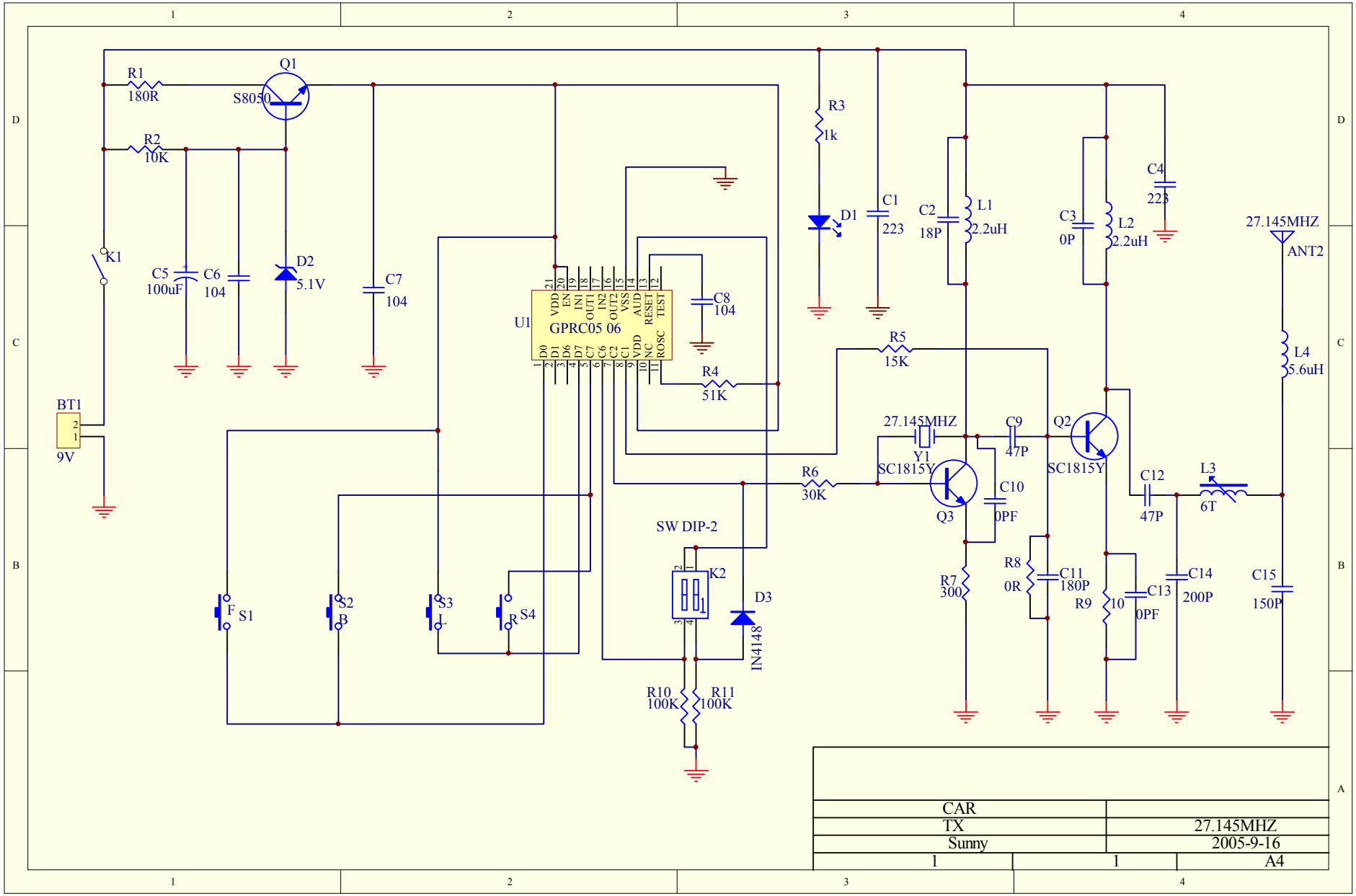
R1
180R
Q1
S8050
R2
10K
K1
C5
100uF
C6
104
D2
5.1V
C7
104
U1
GPRC05 06
VDD
EN
IN1
OUT1
IN2
OUT2
VSS
AUD
RESET
TEST
D0
D1
D6
D7
C7
C6
C2
C1
VDD
NC
ROSC
C8
104
R4
51K
R3
1k
D1
C1
223
C2
18P
L1
2.2uH
C3
0P
L2
2.2uH
C4
223
27.145MHZ
ANT2
L4
5.6uH
R5
15K
BT1
9V
27.145MHZ
Y1
C9
47P
Q2
SC1815Y
R6
30K
SC1815Y
Q3
C10
0PF
C12
47P
L3
6T
SW DIP-2
K2
D3
IN4148
R7
300
R8
0R
C11
180P
R9
10
C13
0PF
C14
200P
C15
150P
F
S1
B
S2
L
S3
R
S4
R10
100K
R11
100K
CAR
TX
27.145MHZ
Sunny
2005-9-16
1
1
A4