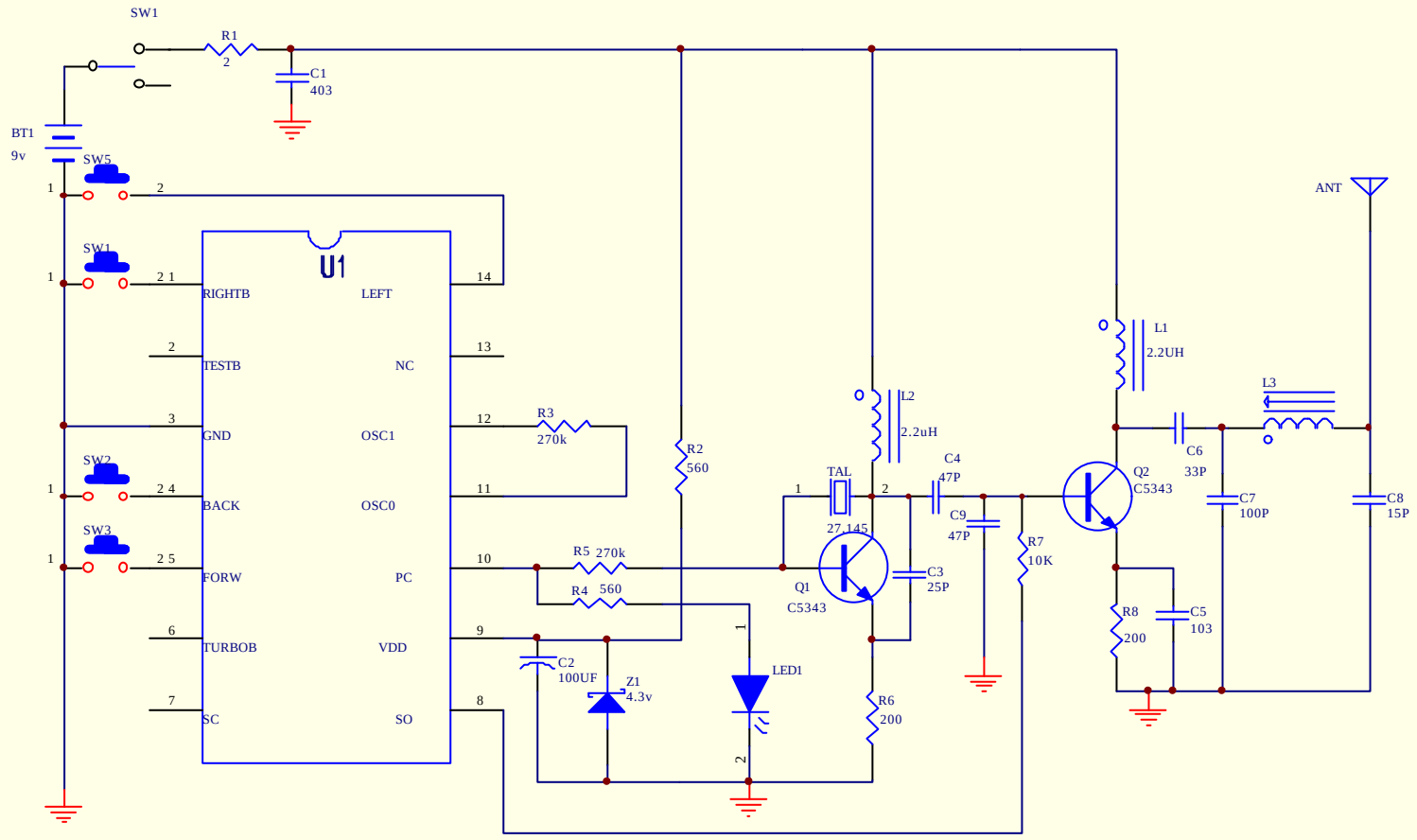

Title :PLANET TOYS		
Size A4	Number :2005029 RX 27.145MHZ	Revision:1.0
Date: 18-Feb-2005		Sheet 1 of 1
File: D:\2005057\2005057本廠資料夾\1-18原理圖.Sch		Drawn By: