Schematic Diagram

49.82-49.90 MHz

2005027RX#49MHz.sch-1 - Sat Mar 05 20:40:02 2005

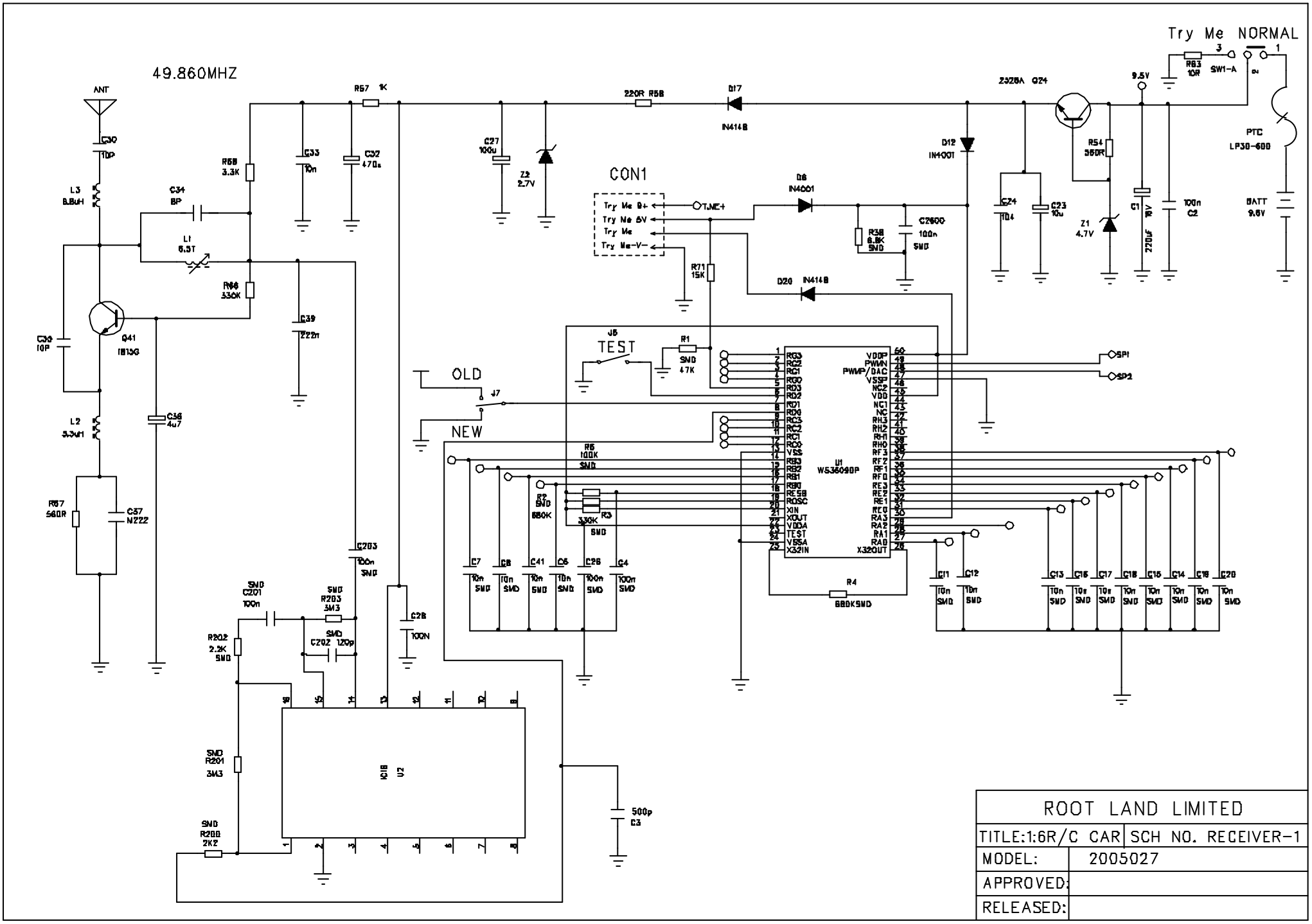

ROOT LAND LIMITED	
TITLE:1:6R/C CAR	SCH NO. RECEIVER-1
MODEL:	2005027
APPROVED:	
RELEASED:	
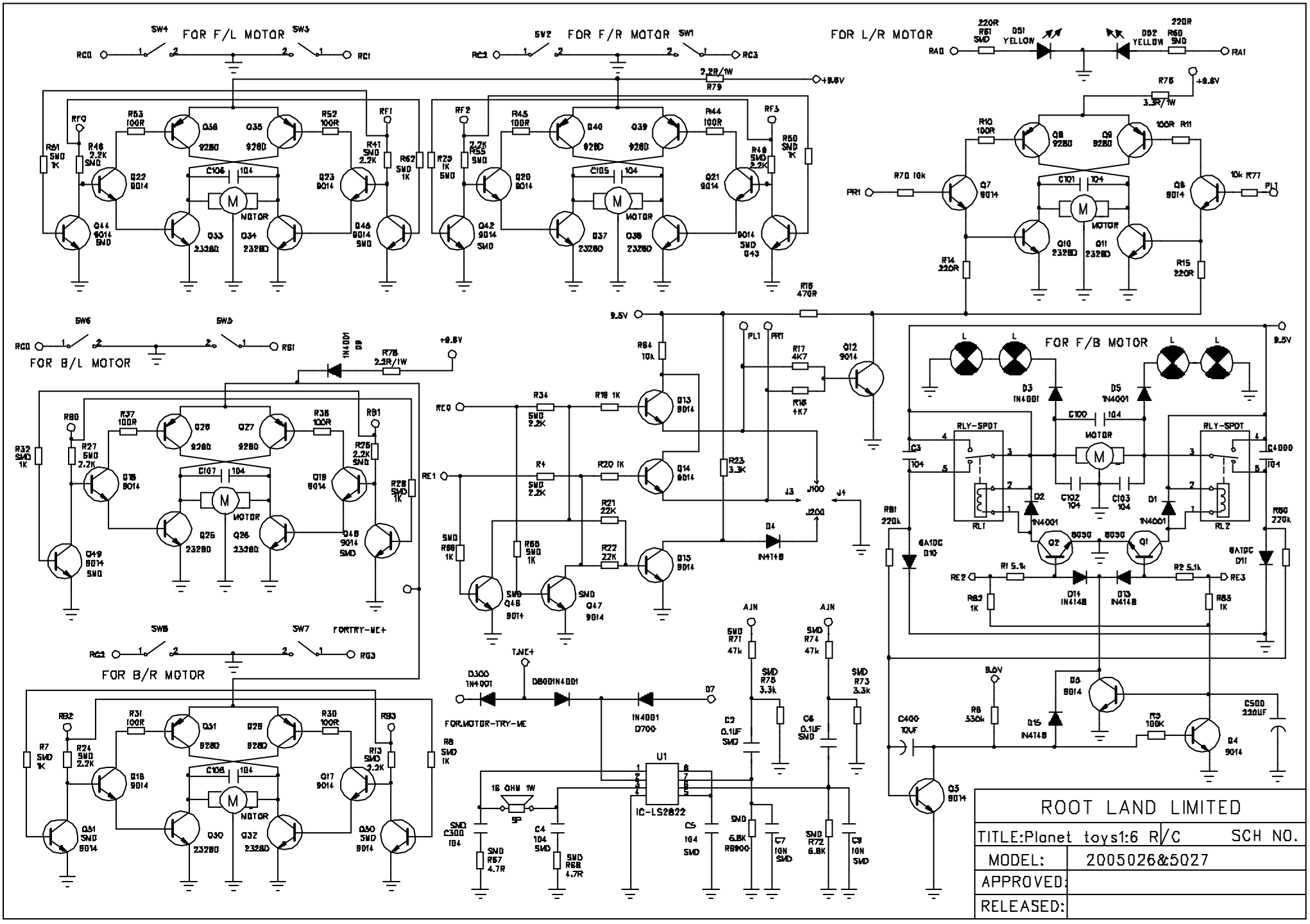
20050265027RD.sch-1 - Sat Mar 05 21:05:41 2005