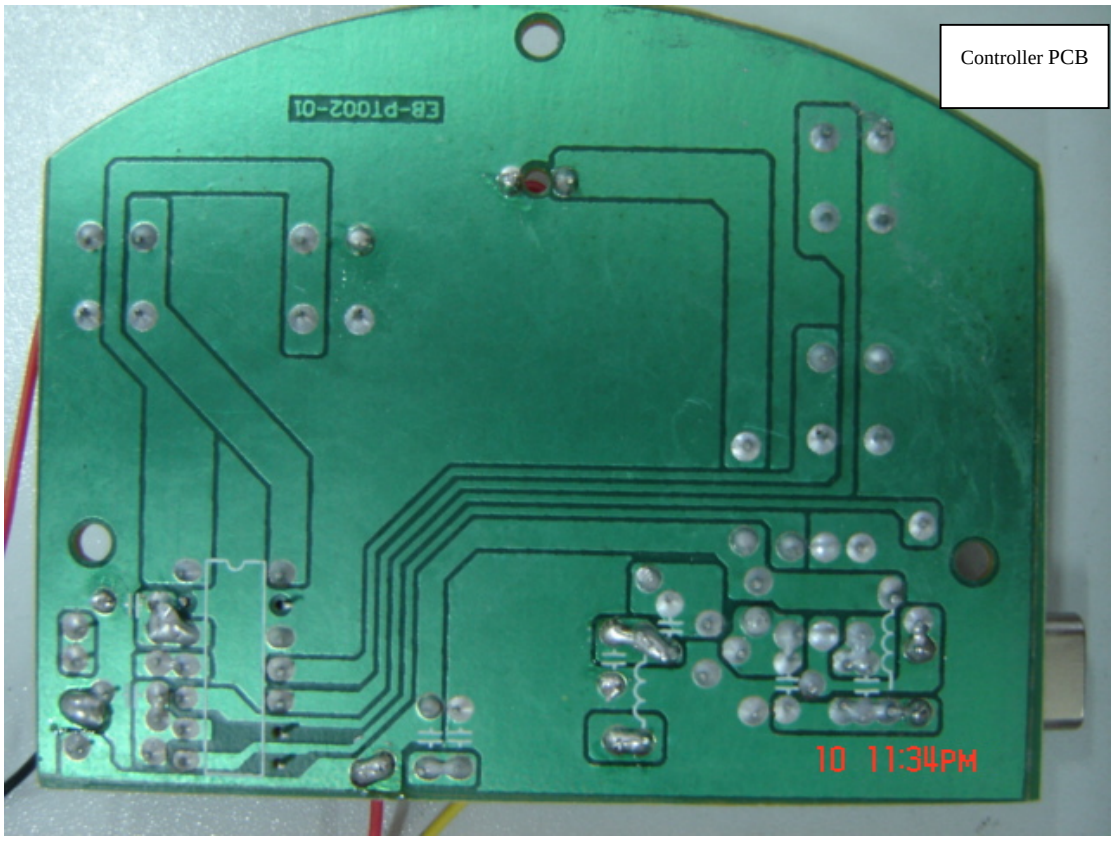
Controller PCB
10 11:34PM

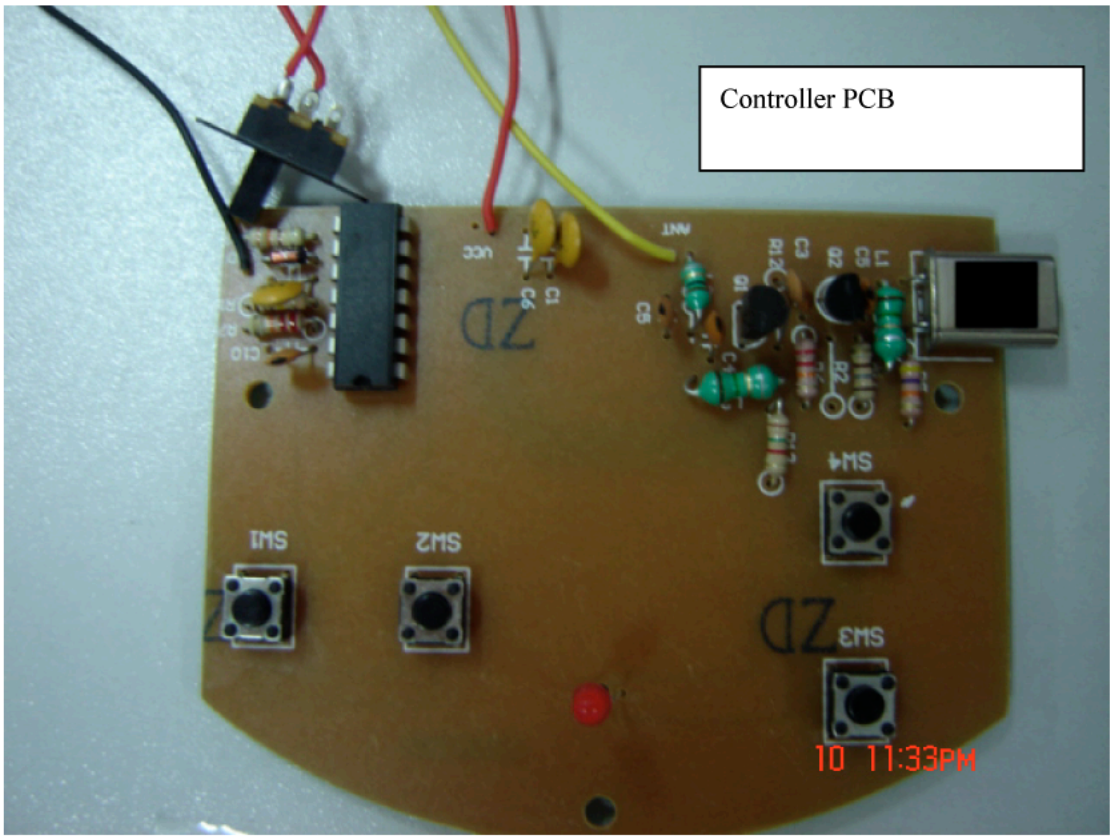


Controller PCB