TX 27MHZ

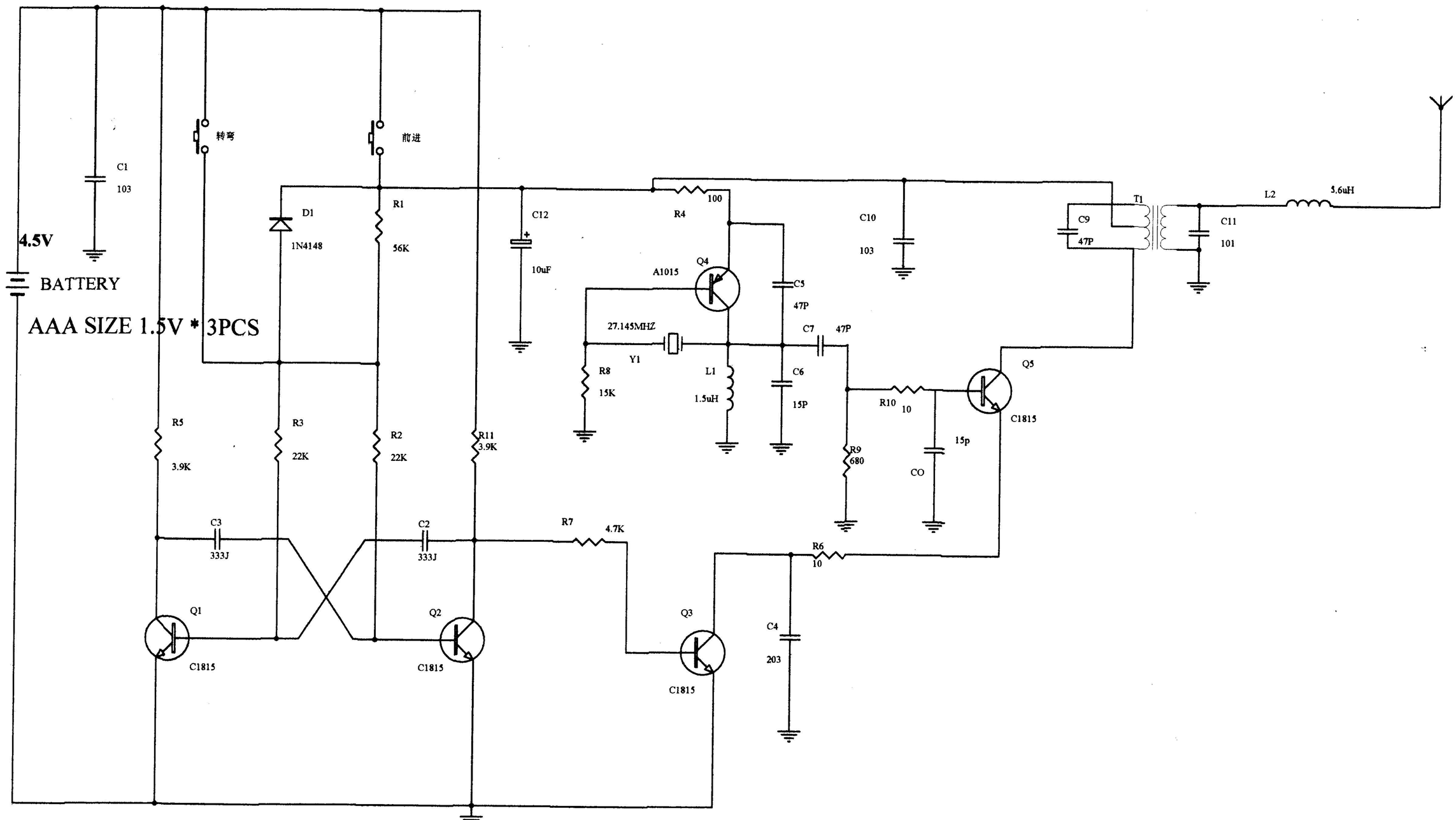

Title	TX 27MHZ	
Size B	Number 吉普车	Revision
Date: 6-Jun-2007		Sheet of
File: F:\罗春波文 件\吉普车\吉普车.ddb		Drawn By: