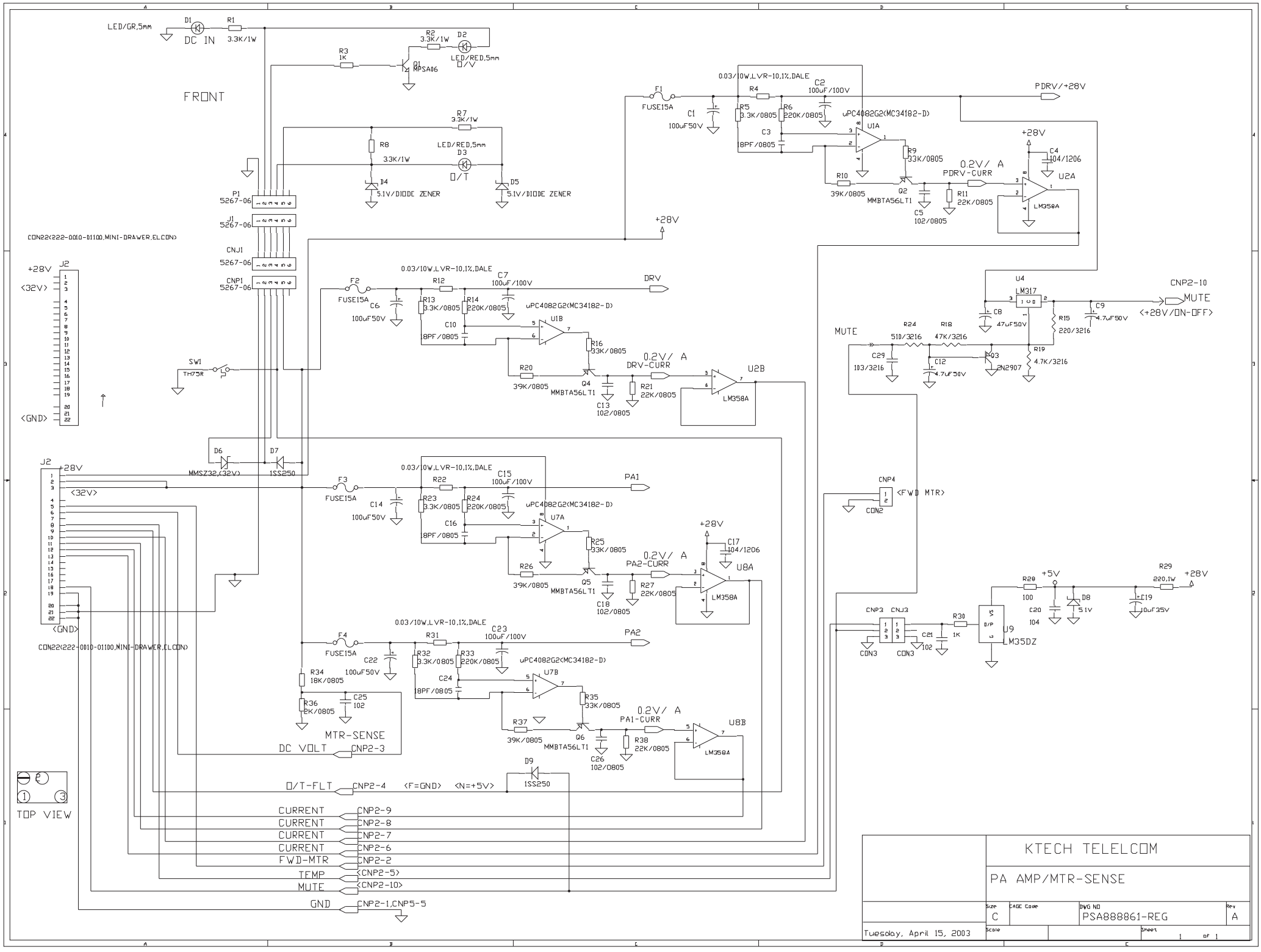

	KTECH TELELCOM		
	PA AMP/MTR-SENSE		
	Size C	CAGE Code	DWG NO PSA888861-REG	Rev A
Tuesday, April 15, 2003	Scale		Sheet 1 of 1