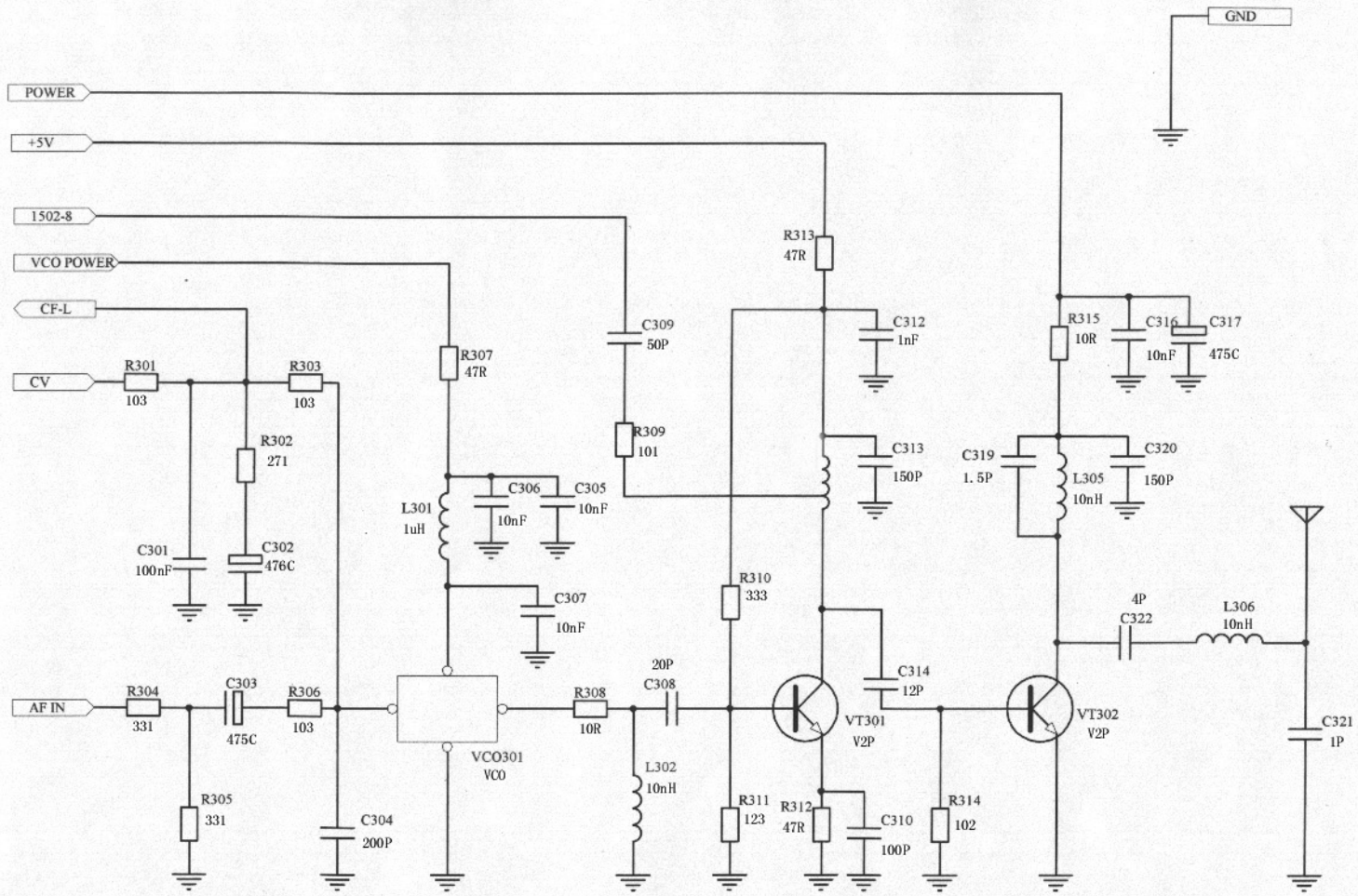
GND
POWER
+5V
1502-8
VCO POWER
CF-L
CV
AF IN
R301
103
R302
271
R303
103
R304
331
R305
331
R306
103
R307
47R
R308
10R
R309
101
R310
333
R311
123
R312
47R
R313
47R
R314
102
R315
10R
C301
100nF
C302
476C
C303
475C
C304
200P
C305
10nF
C306
10nF
C307
10nF
C308
20P
C309
50P
C310
100P
C312
1nF
C313
150P
C314
12P
C316
10nF
C317
475C
C319
1. 5P
C320
150P
C321
1P
C322
4P
L301
1uH
L302
10nH
L305
10nH
L306
10nH
VCO301
VCO
VT301
V2P
VT302
V2P