JP-24668 block diagram

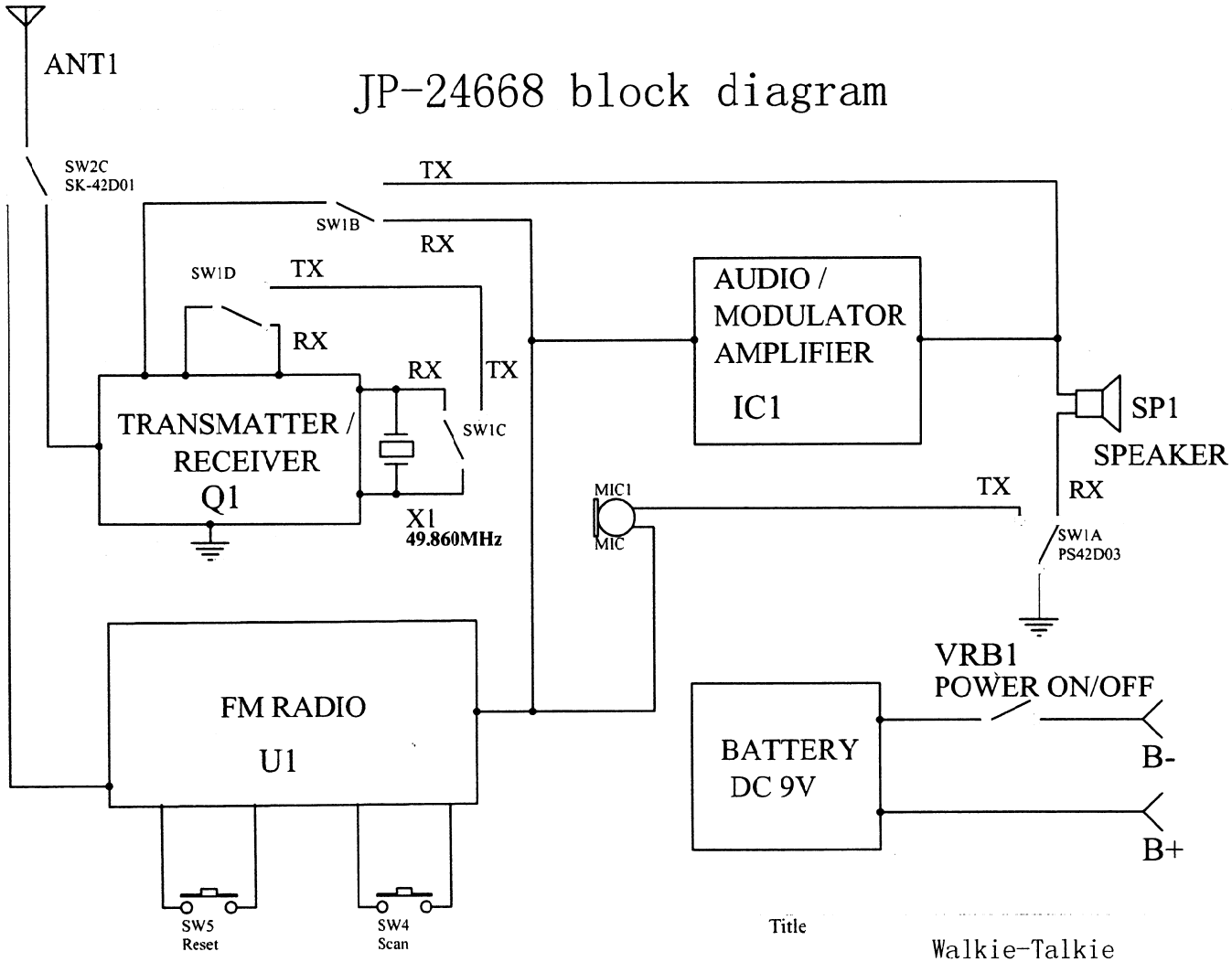

Title	Walkie-Talkie		
Size A4	Number JP-24668		Revision
Date: 12-Jan-2005		Sheet of	
File: C:\wt-361.ddb		Drawn By:	