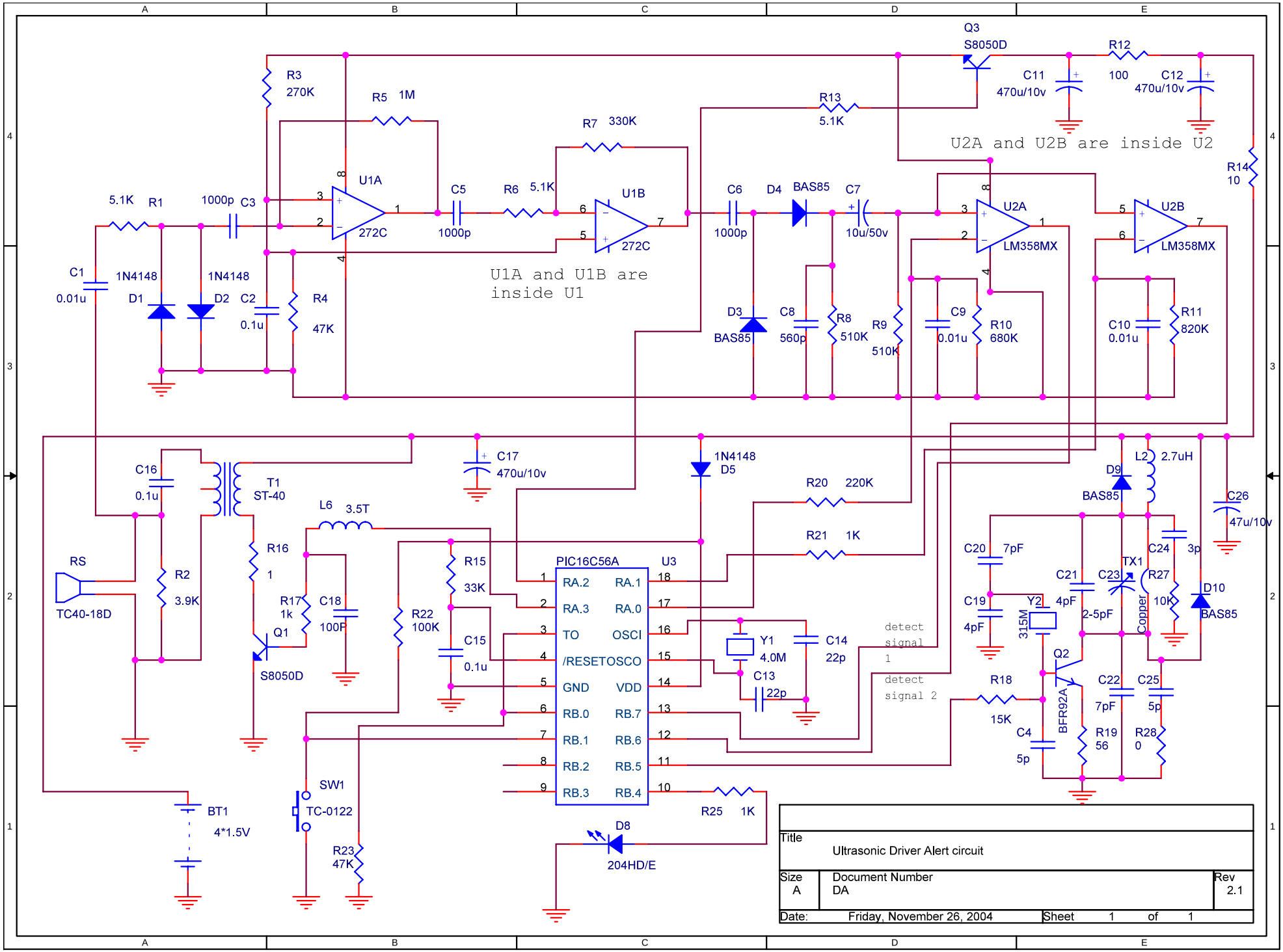
Q3
S8050D
R12
100
C11
470u/10v
C12
470u/10v
R3
270K
R5 1M
R7 330K
R13
5.1K
U2A and U2B are inside U2
R14
10
5.1K R1
1000p C3
U1A
272C
C5
1000p
R6 5.1K
U1B
272C
C6
1000p
D4 BAS85
C7
10u/50v
U2A
LM358MX
U2B
LM358MX
C1
0.01u
1N4148
D1
1N4148
D2
C2
0.1u
R4
47K
U1A and U1B are
inside U1
D3
BAS85
C8
560p
R8
510K
R9
510K
C9
0.01u
R10
680K
C10
0.01u
R11
820K
C16
0.1u
T1
ST-40
C17
470u/10v
1N4148
D5
R20 220K
R21 1K
L6 3.5T
R16
1
R17
1k
C18
100P
Q1
S8050D
RS
TC40-18D
R2
3.9K
R15
33K
R22
100K
C15
0.1u
PIC16C56A
U3
RA.2
RA.3
TO
/RESET
GND
RB.0
RB.1
RB.2
RB.3
RA.1
RA.0
OSCI
OSCO
VDD
RB.7
RB.6
RB.5
RB.4
Y1
4.0M
C13
22p
C14
22p
detect
signal
1
detect
signal 2
R25 1K
D8
204HD/E
SW1
TC-0122
BT1
4*1.5V
R23
47K
L2 2.7uH
D9
BAS85
C26
47u/10v
C20 7pF
C19
4pF
Y2
315M
C21
4pF
C23
2-5pF
TX1
Copper
R27
10K
C24 3p
D10
BAS85
Q2
BFR92A
R18
15K
C4
5p
C22
7pF
C25
5p
R19
56
R28
0
Title
Ultrasonic Driver Alert circuit
Size
A
Document Number
DA
Rev
2.1
Date:
Friday, November 26, 2004
Sheet 1 of 1