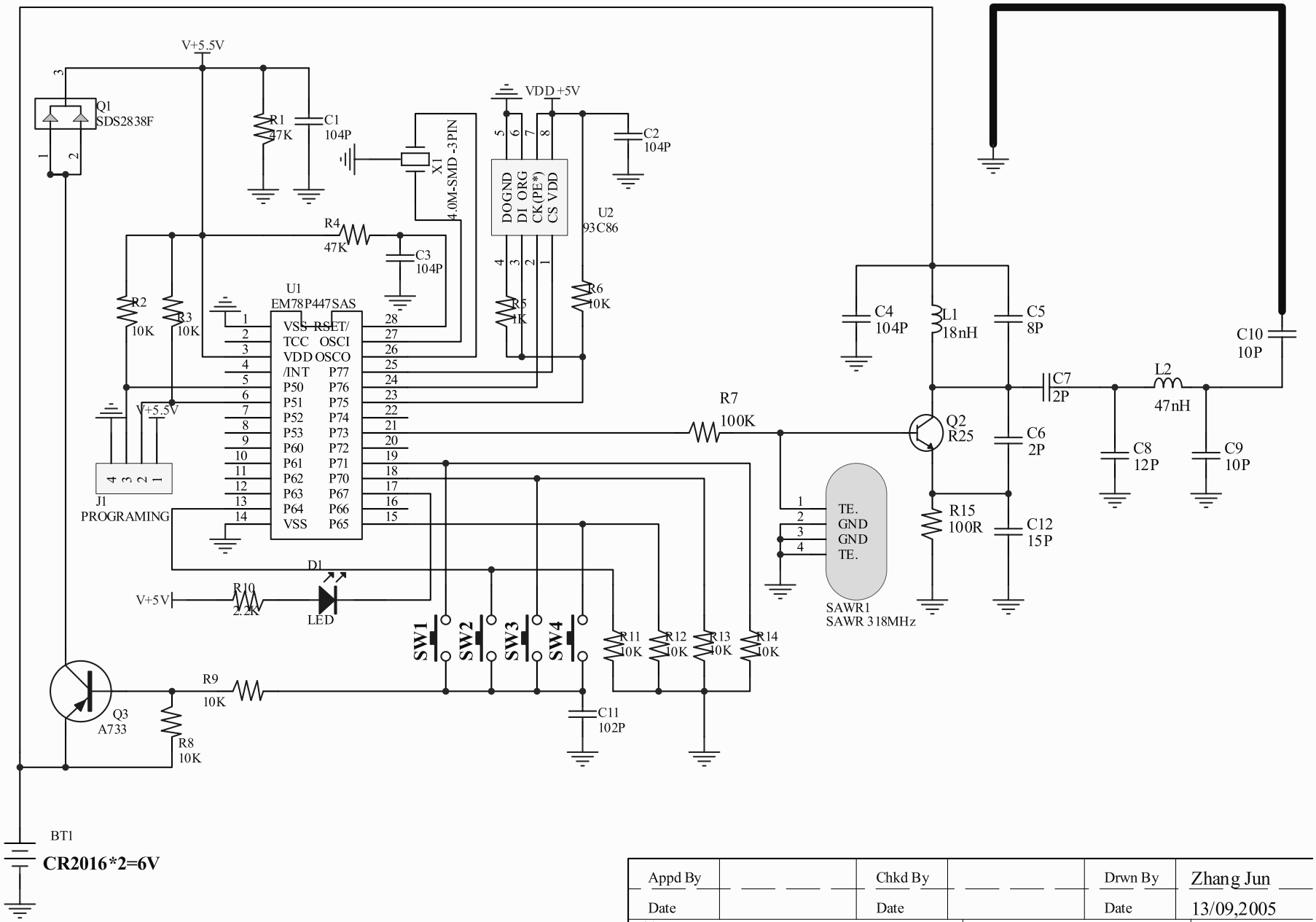

Appd By		Chkd By		Drwn By	Zhang Jun
Date		Date		Date	13/09,2005
Title	T-KR4(318MHz)		KeylessRide Round Rock, Texas USA Tel: 877.619.3136 INTL: 512.310.5757 Fax: 208.475.6230		KeylessRide
Size: A4	Number: 1	Revision: C			
File:		2005-9-13	Time: 10:57:18	Sheet 0 of 0	