ATTACHMENT G.

- SCHEMATICS DIAGRAM

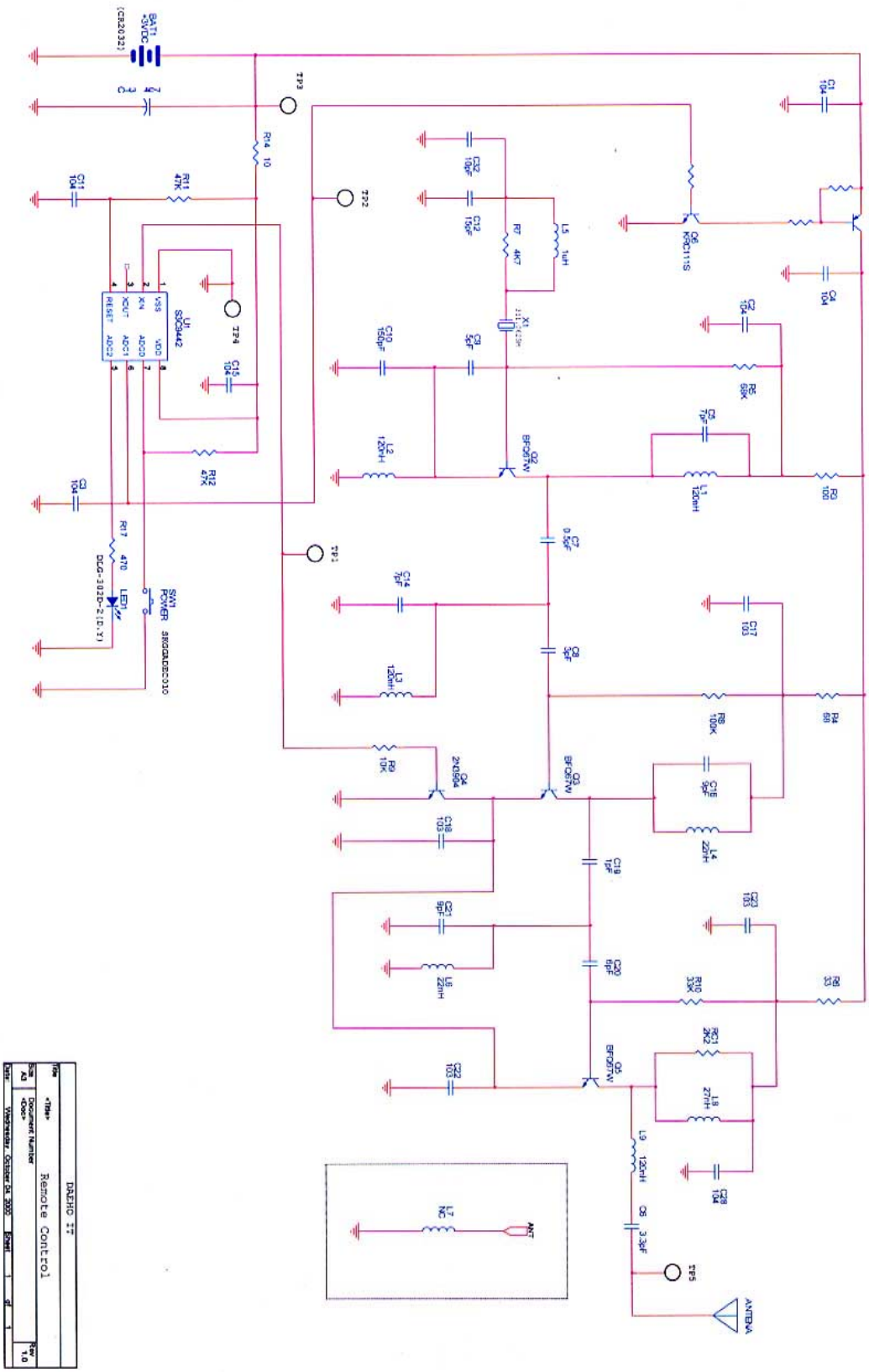
BAT1
3VDC
(CR2032)
TP3
R14 10
C1 104
C11 104
R11 47K
U1 SC9442
VSS
XIN
XOUT
RESET
VDD
ADC0
ADC1
ADC2
TP4
C15 104
R12 47K
C3 104
R17 470
LED1
DCG-302D-2(D.Y)
SW1
POWER
SKQGADE010
TP2
TP1
C12 15pF
C2 15pF
R7 4K7
L5 1uH
X1
C10 150pF
C9 5pF
L2 120nH
Q2
BFQ67W
Q1
RN1065
Q6
KRC111S
C4 104
C5 1pF
R6 68K
L3 120nH
R3 103
C7 0.5pF
C14 7pF
C8 3pF
L3 120nH
C17 103
R8 100K
R4 68
R9 10K
Q4
2N1994
Q3
BFQ67W
C16 9pF
L4 22nH
C18 103
C19 1pF
C21 9pF
C20 9pF
L6 120nH
C23 103
R10 33K
R5 33
RC1 3K2
Q5
BFQ67W
L8 27nH
C22 103
L9 12nH
C6 3.9pF
C28 104
L7
NC
ANT
TP5
ANTENA
DAEHO IT
Remote Control
Document Number
Wednesday, October 04, 2000
Sheet 1 of 1
Rev 1.0