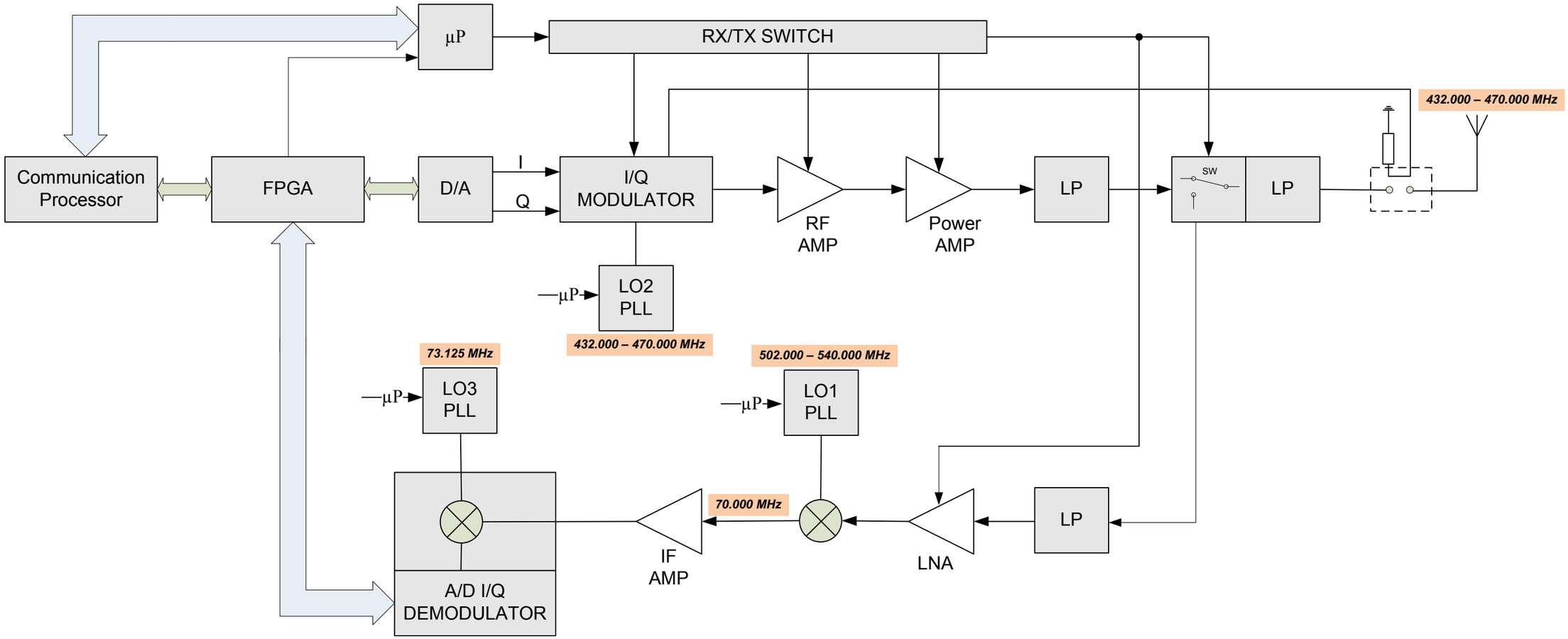

RACOM s.r.o. Nove Mesto na Morave			
Product: RipEX-400 432-470MHz			
Unit: Block diagram			Rev: 6.1
Last modification: Tannenberg			Date: 22.1.2012
Des: Danek	Date: 22.1.2012	Siz A3	Sheet: 1 of 1