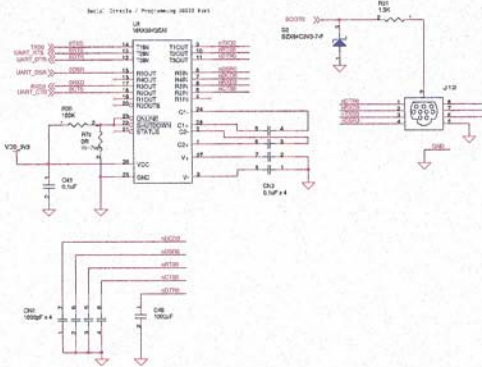

Copyright © 2005 Nivis LLC, 1200 Circle 75 Pkwy, Third Floor, Atlanta, GA 30339, U.S.A. All rights reserved. This document and its contents are confidential and proprietary to Nivis LLC. Nivis has intellectual property rights relating to technology embodied in this document, which may include (without limitation) one or more patents or pending patent applications in the U.S. and other countries. The document is distributed under a license with products and services that restrict its use, copying and distribution. This document may not be reproduced in any form by any means without the prior written authorization of Nivis LLC and its licensors, if any.

NIVIS

Title: ACCESS NODE USB V6

Size	Document Number	Rev
B	51000078	B

Date: Tuesday, September 11, 2007 Sheet 5 of 16

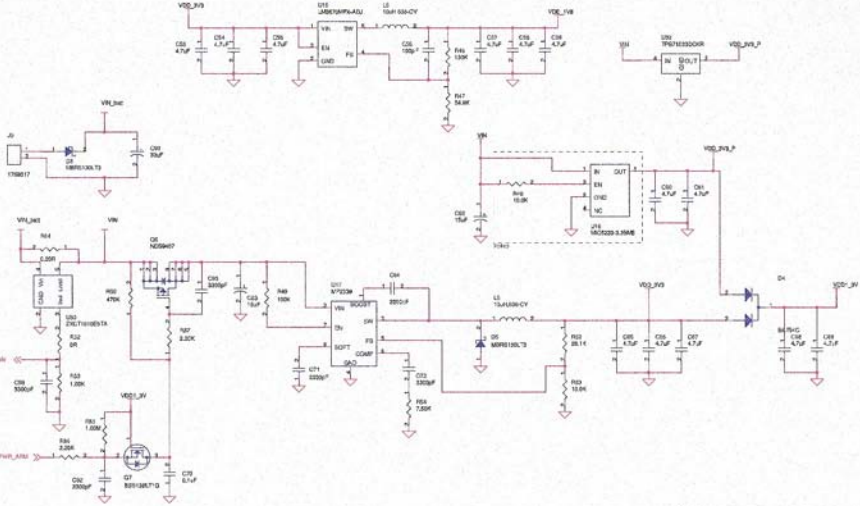

HIVES			
Title	ACCESS NODE USB V5		
Size B	Document Number 5100078		Rev B
Date: Tuesday, September 11, 2007		Sheet 1 of 16	

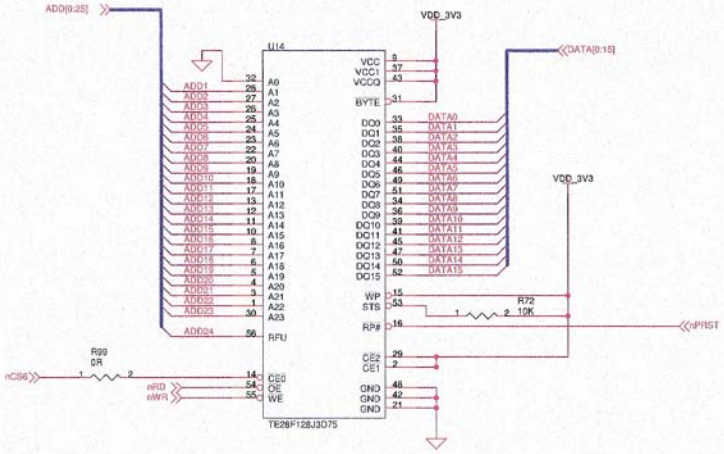

NIVIS

Title

ACCESS NODE USB V6

Size	Document Number	Rev
A	51000078	B

Date: Tuesday, September 11, 2007 Sheet 10 of 18

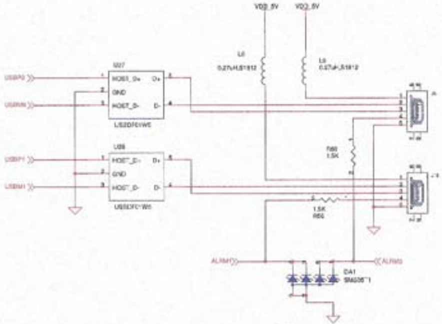

NIVIS

Title: ACCESS NODE USB V6

Size	Document Number	Rev
A	51000078	B

Date: Tuesday, September 11, 2007

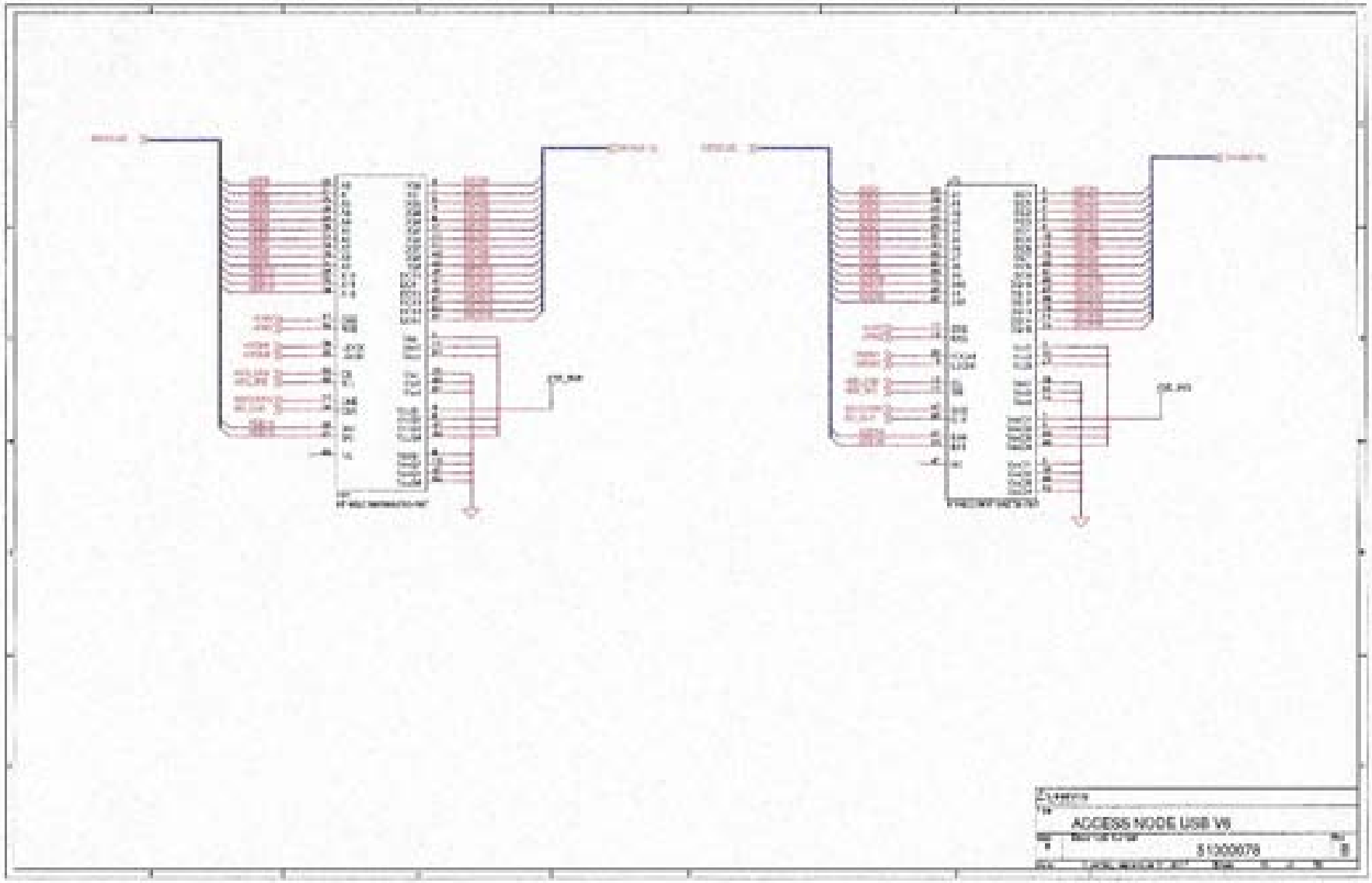
ACCESS NODE USB V6
51300079

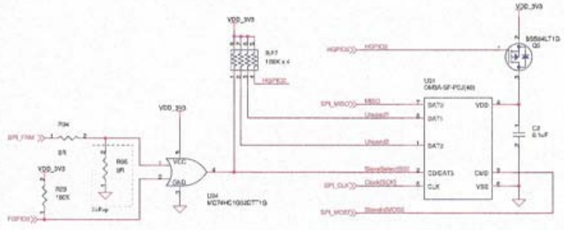

NIVIS

Title

ACCESS NODE USB V6

Size	Document Number	Rev
A	5100078	B

Date: Tuesday, September 11, 2007 Sheet 14 of 15

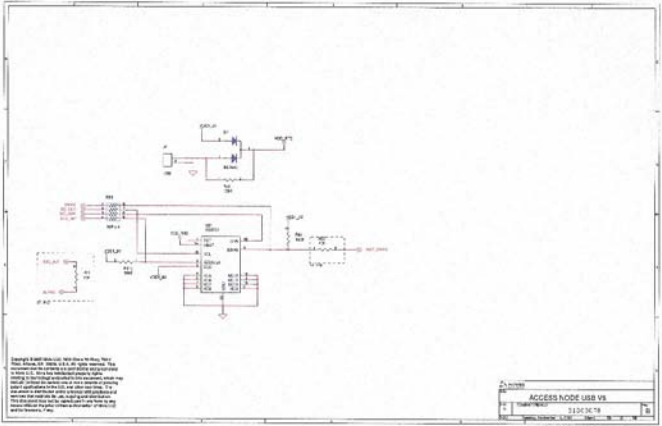
ACCESS NODE USB V8

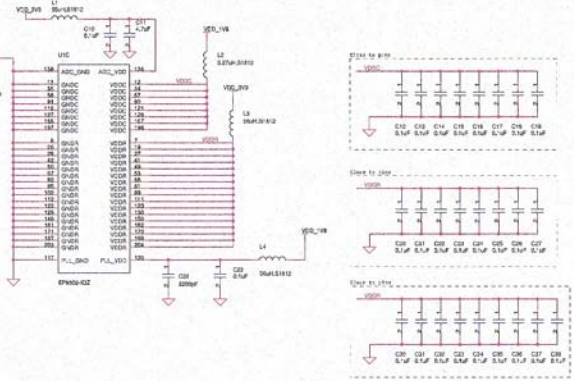

NEVIS

Title: ACCESS NODE USB V6

Size: B | Document Number: 51000078 | Rev: B

Date: Tuesday, December 11, 2007 | Sheet 4 of 18

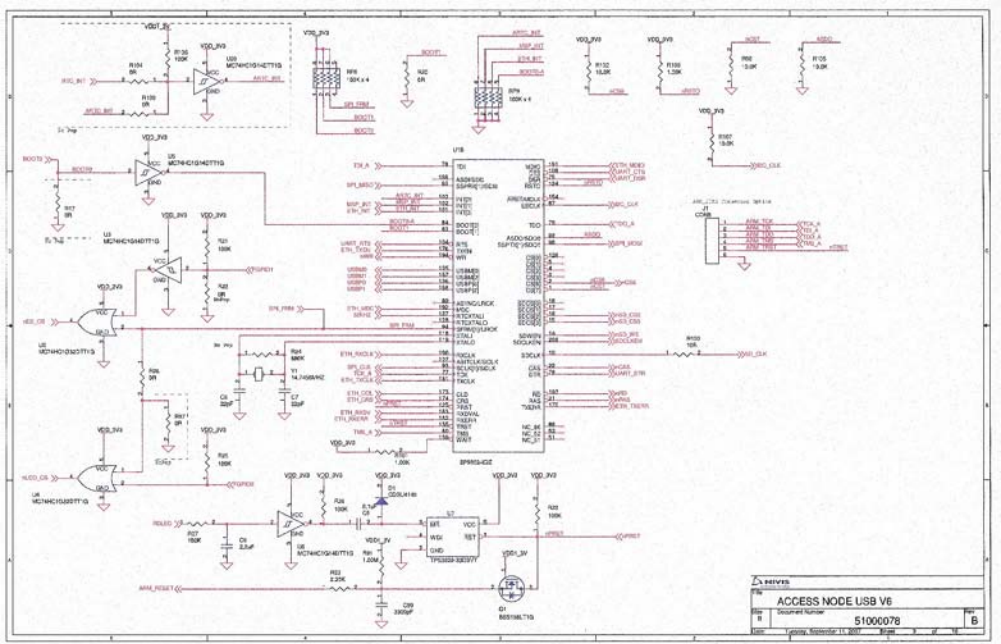
ACCESS NODE USB V6
51000078
B
Tuesday, September 11, 2007
9 of 16

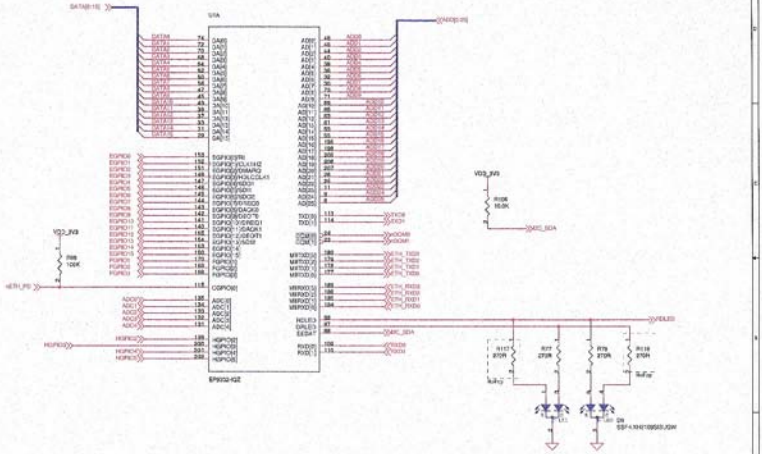

NEVIS

Title: ACCESS NODE USB V6

Size: B | Document Number: 51000078 | Rev: B

Date: Tuesday, September 13, 2005 | Sheet 2 of 12

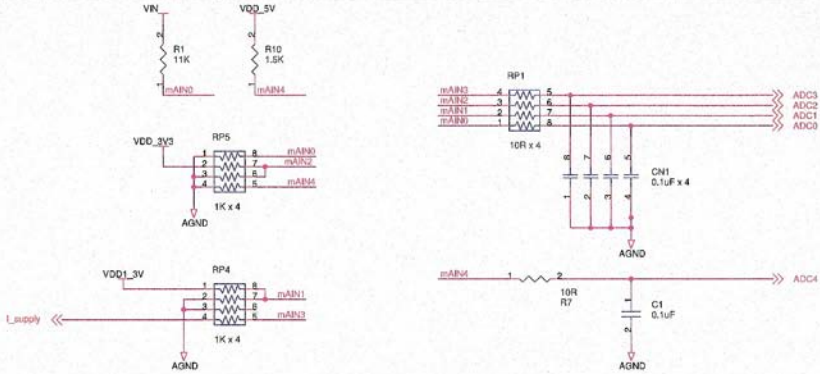

Copyright © 2005 Nivis LLC, 1000 Circle 75 Pkwy, Third Floor, Atlanta, GA 30339, U.S.A. All rights reserved. This document and its contents are confidential and proprietary to Nivis LLC. Nivis has intellectual property rights relating to technology embodied in this document, which may include (without limitation) one or more patents or pending patent applications in the U.S. and other countries. The document is distributed under a license with products and services that restricts its use, copying and distribution. This document may not be reproduced in any form by any means without the prior written authorization of Nivis LLC and its licensors, if any.

NIVIS

Title	ACCESS NODE USB V6	
Size A	Document Number 51000078	Rev B
Date: Tuesday, September 11, 2007	Sheet 1 of 16	

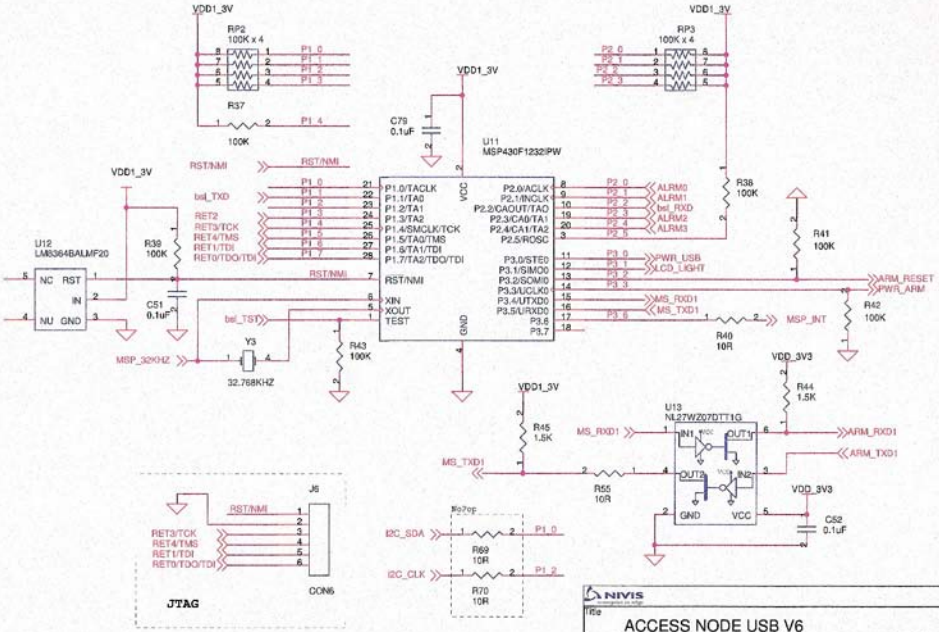
VDD1_3V
RP2
100K x 4
P1_0
P1_1
P1_2
P1_3
R37
100K
P1_4
C79
0.1uF
U11
MSP430F1232IPW
RST/NMI
bsl_TXD
RET2
RET3/TCK
RET4/TMS
RET1/TDI
RET0/TDO/TDI
P1.0/TACLK
P1.1/TA0
P1.2/TA1
P1.3/TA2
P1.4/SMCLK/TCK
P1.5/TA0/TMS
P1.6/TA1/TDI
P1.7/TA2/TDO/TDI
RST/NMI
XIN
XOUT
TEST
VCC
GND
P2.6/ACLK
P2.1/INCLK
P2.2/CAOUT/TAO
P2.3/CA0/TA1
P2.4/CA1/TA2
P2.5/ROSC
P3.0/STE0
P3.1/SIMO0
P3.2/SOMI0
P3.3/UCLK0
P3.4/UTXD0
P3.5/URXD0
P3.6
P3.7
RP3
100K x 4
P2_0
P2_1
P2_2
P2_3
ALRM0
ALRM1
bsl_RXD
ALRM2
ALRM3
PWR_USB
LCD_LIGHT
MS_RXD1
MS_TXD1
R38
100K
R41
100K
ARM_RESET
PWR_ARM
R42
100K
MSP_INT
R40
10R
U12
LM8364BALMF20
NC
RST
IN
NU
GND
R39
100K
C51
0.1uF
bsl_TST
Y3
32.768KHZ
MSP_32KHZ
R43
100K
R44
1.5K
VDD_3V3
U13
NL27WZ07DTT1G
IN1
OUT1
OUT2
IN2
GND
VCC
R45
1.5K
MS_RXD1
MS_TXD1
ARM_RXD1
ARM_TXD1
R55
10R
C52
0.1uF
J6
CON6
JTAG
I2C_SDA
I2C_CLK
R69
10R
R70
10R
P1_0
P1_2
NIVIS
Title
ACCESS NODE USB V6
Size
A
Document Number
51000078
Rev
B
Date:
Tuesday, September 11, 2007
Sheet
9
of
16

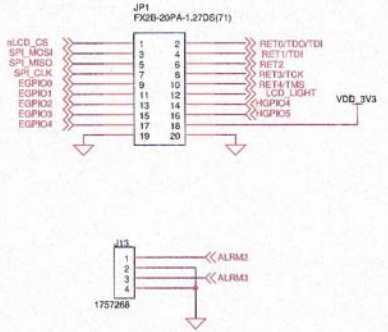

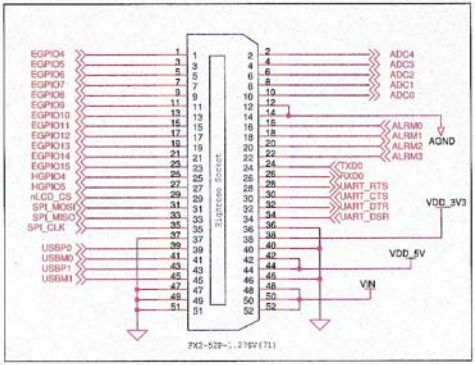

NIVIS

Title

ACCESS NODE USB V6

Size	Document Number	Rev
A	51000078	B

Date: Tuesday, September 11, 2007 Sheet 8 of 16

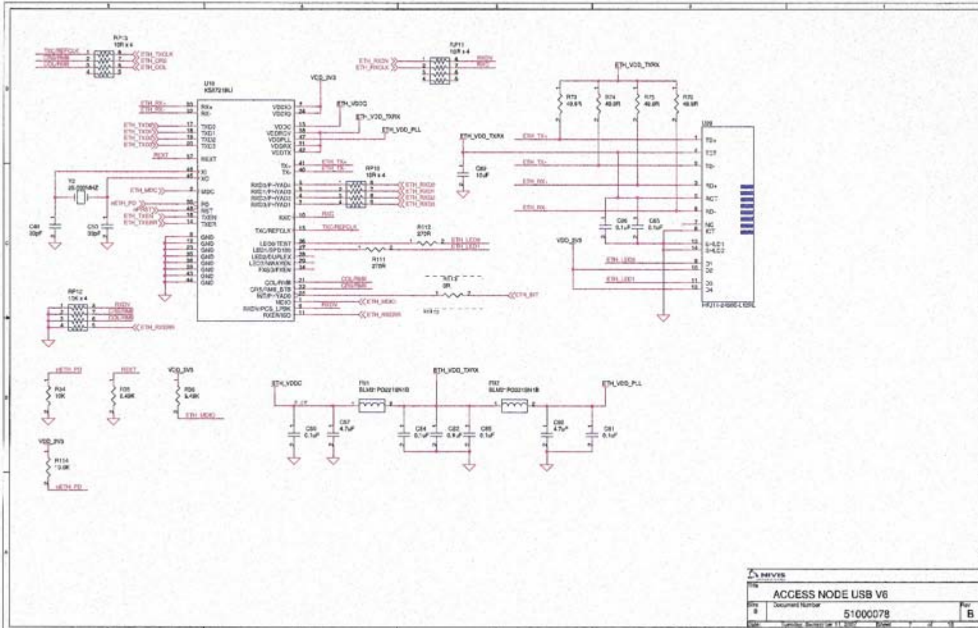
U19
KS8721BLI
U20
ETH_VDD_TXRX
VDD_3V3
ETH_VDDC
ETH_VDD_PLL
ACCESS NODE USB V6
Document Number
51000078
Rev
B

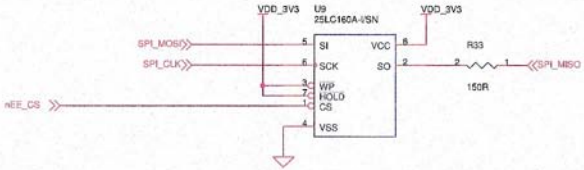

NIVIS

Title

ACCESS NODE USB V6

Size	Document Number	Rev
A	51000078	B

Date: Tuesday, September 11, 2007 Sheet 6 of 16

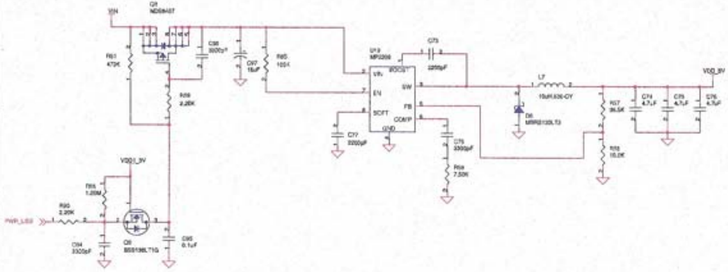

NIVIS

Title: ACCESS NODE USB V6

Size: B | Document Number: 51000078 | Rev: B

Date: Tuesday, September 11, 2007