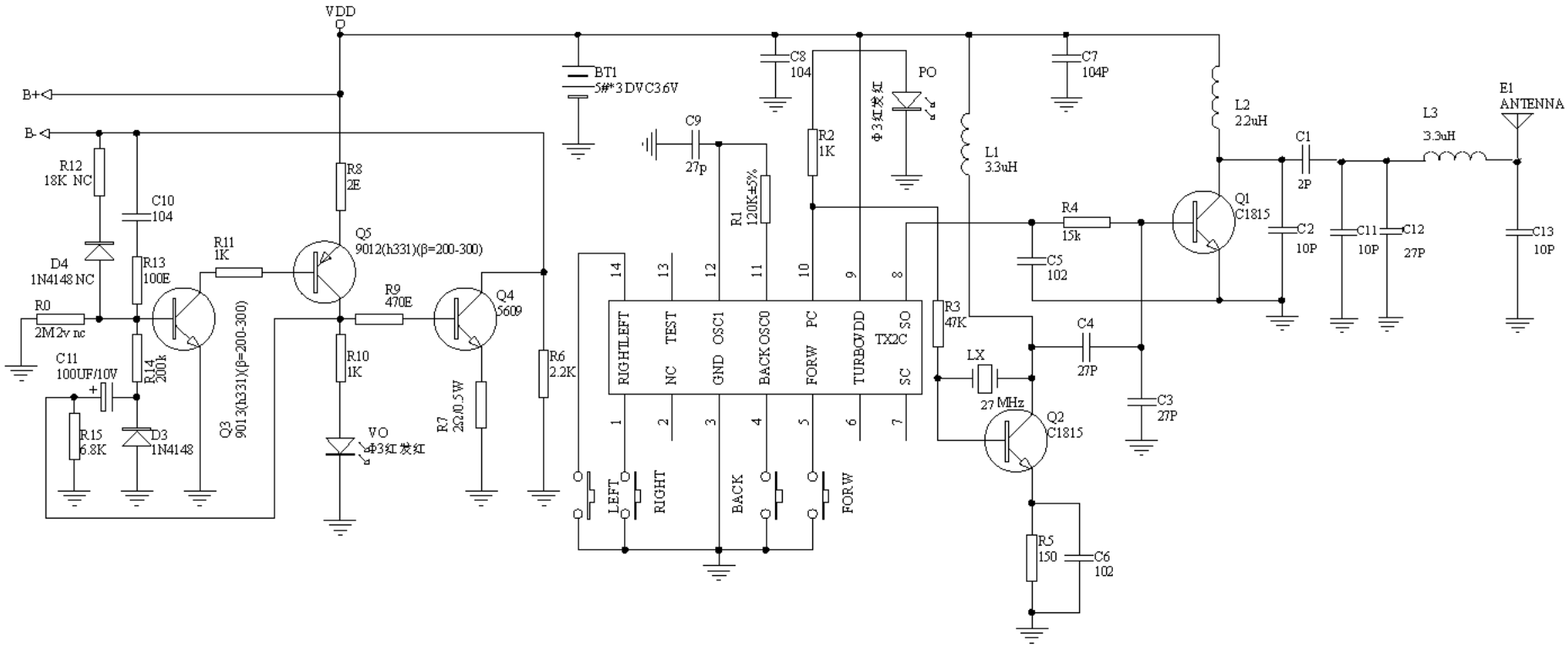

Title	摇控车发射部分	
Size A4	Number SY-S036A	Revision SY-S048V1.0
Date: 29-Nov-2004		Sheet of
File: D:\PROTE99\sy-s048.ddb		Drawn By: ZXY