Bluetooth Headset with CODEC rev1.4

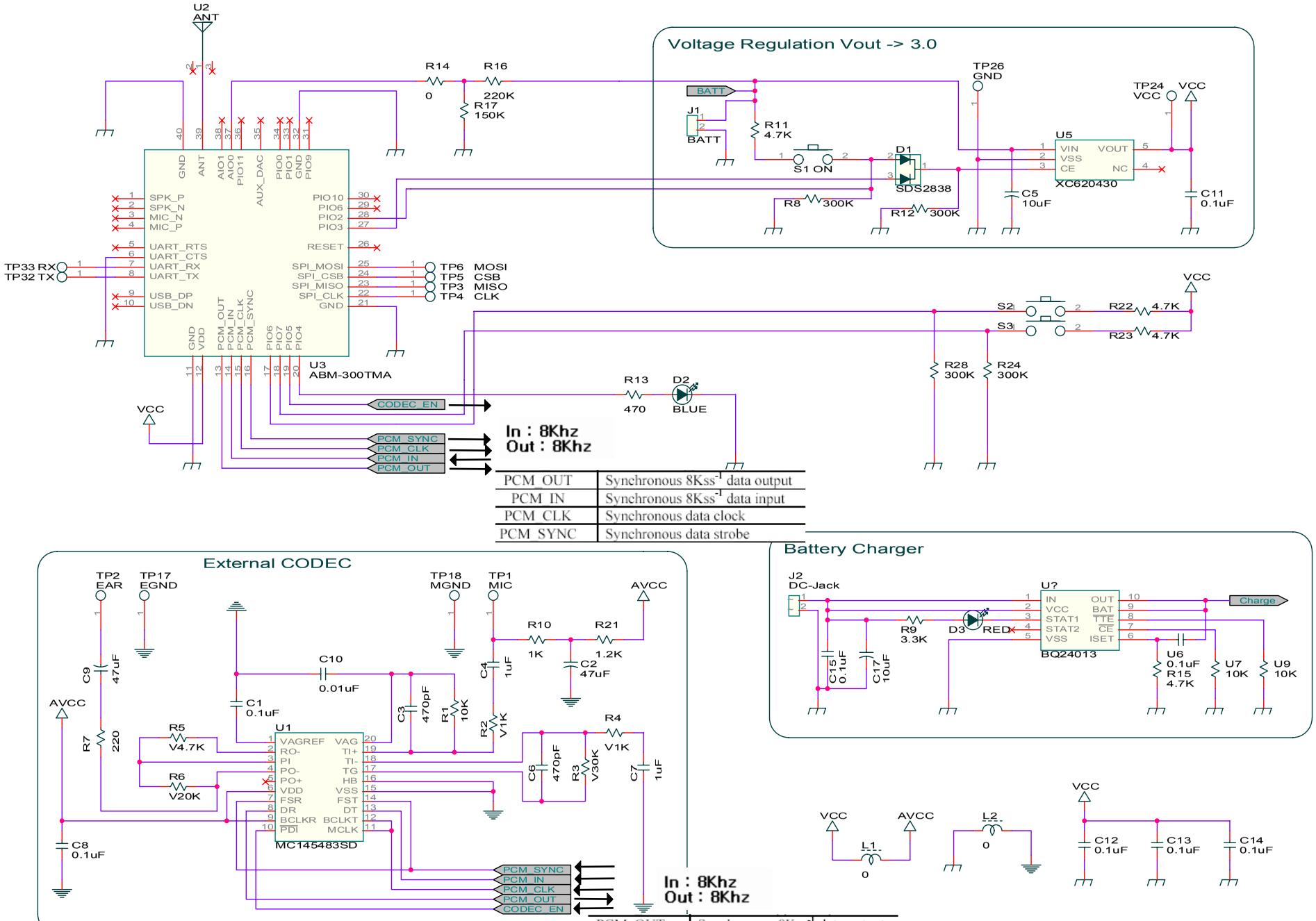

PCM_OUT	Synchronous 8Kss^{-1} data output
PCM_IN	Synchronous 8Kss^{-1} data input
PCM_CLK	Synchronous data clock
PCM_SYNC	Synchronous data strobe

PCM_OUT	Synchronous 8Kss^{-1} data output
PCM_IN	Synchronous 8Kss^{-1} data input
PCM_CLK	Synchronous data clock
PCM_SYNC	Synchronous data strobe

Title
Module Circuit : C:\DOCUMENTS AND SETTINGS\HUN\바탕 화면\DO\SCH\AIRLOGIC\HS_2004_10_17_CODEC.

Size A3 | No. docno. | Rev. _rev.

File C:\...\AIRLOGIC\HS_2004_10_17_codec.DSN Date 2004/10/24 Time 23:57 1 of 1