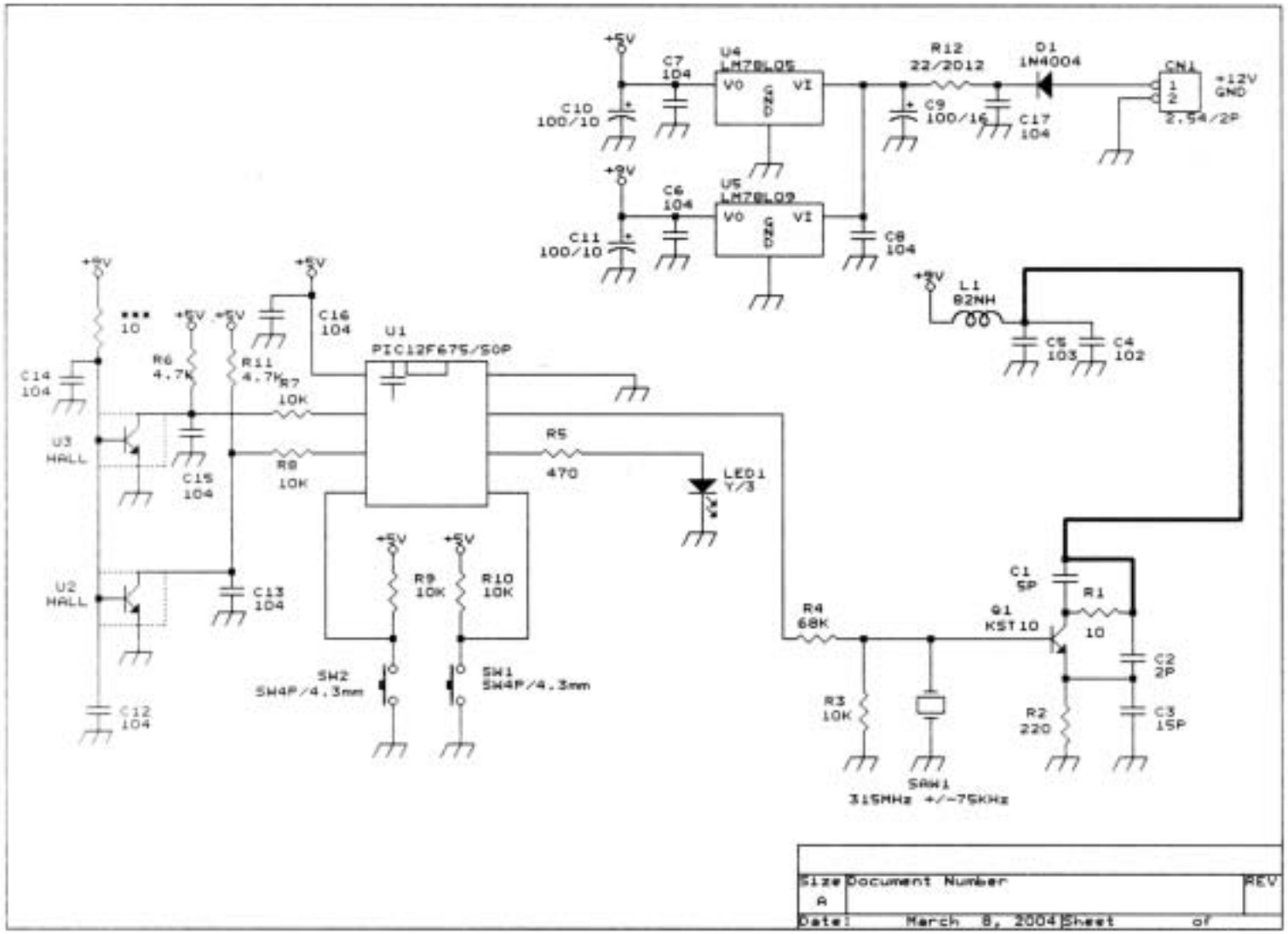
+5V
C7
104
U4
LM78L05
VO
VI
GND
C10
100/10
R12
22/2012
D1
1N4004
CN1
+12V
GND
2.54/2P
C9
100/16
C17
104
C6
104
U5
LM78L09
C11
100/10
C8
104
L1
82NH
C5
103
C4
102
10
R6
4.7K
R11
4.7K
C16
104
U1
PIC12F675/SOP
C14
104
R7
10K
U3
HALL
C15
104
R8
10K
R5
470
LED1
Y/3
R9
10K
R10
10K
U2
HALL
C13
104
SW2
SW4P/4.3mm
SW1
SW4P/4.3mm
C12
104
C1
5P
R1
10
Q1
KST10
R4
68K
C2
2P
R3
10K
R2
220
C3
15P
SAW1
315MHz +/-75KHz
Size
A
Document Number
REV
Date:
March 8, 2004
Sheet
of