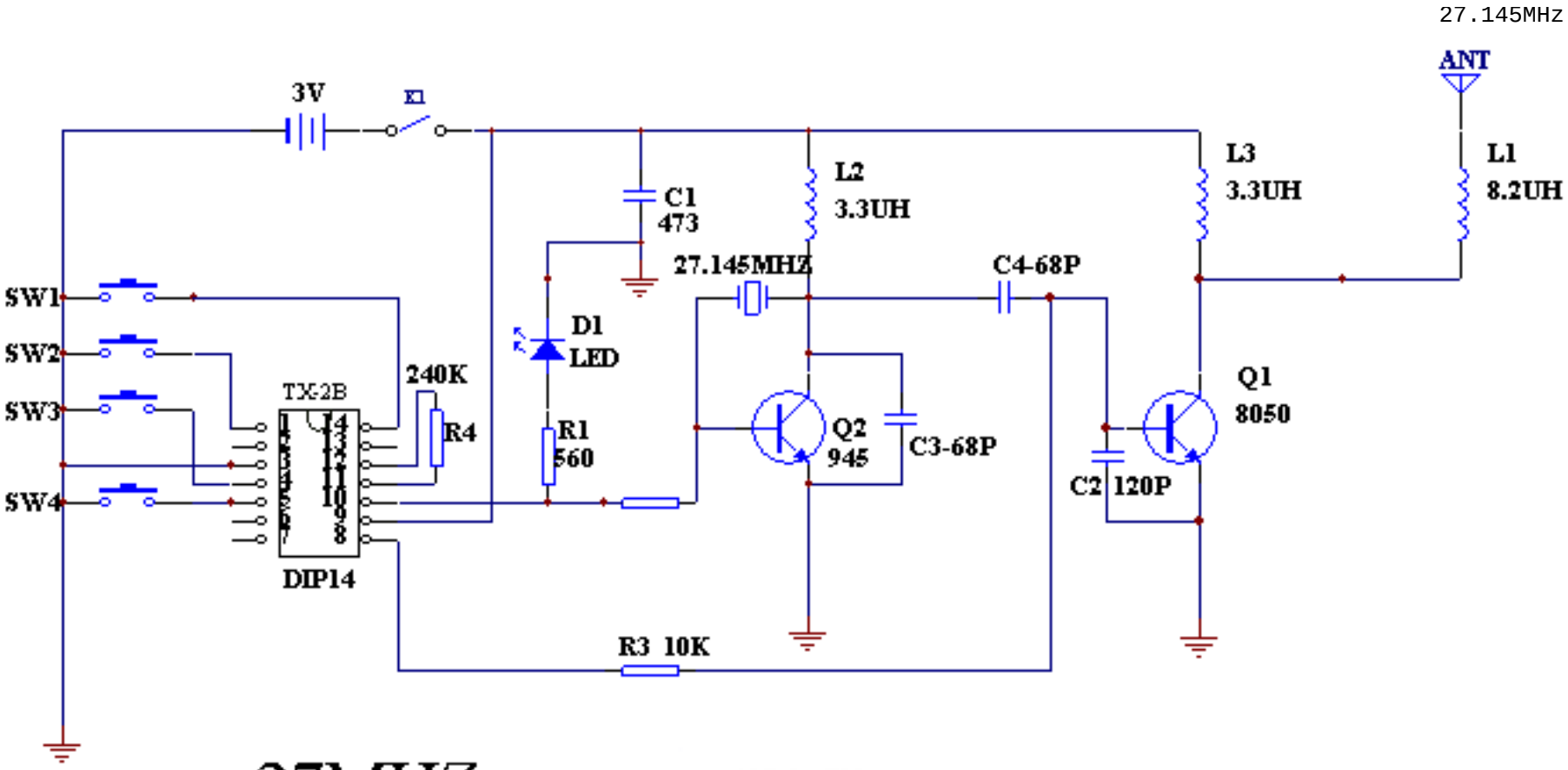
27.145MHz
ANT
3V
K1
C1
473
L2
3.3UH
L3
3.3UH
L1
8.2UH
27.145MHZ
C4-68P
SW1
SW2
SW3
SW4
D1
LED
240K
TX-2B
R4
R1
560
Q2
945
C3-68P
Q1
8050
C2 120P
DIP14
R3 10K

27MHZ