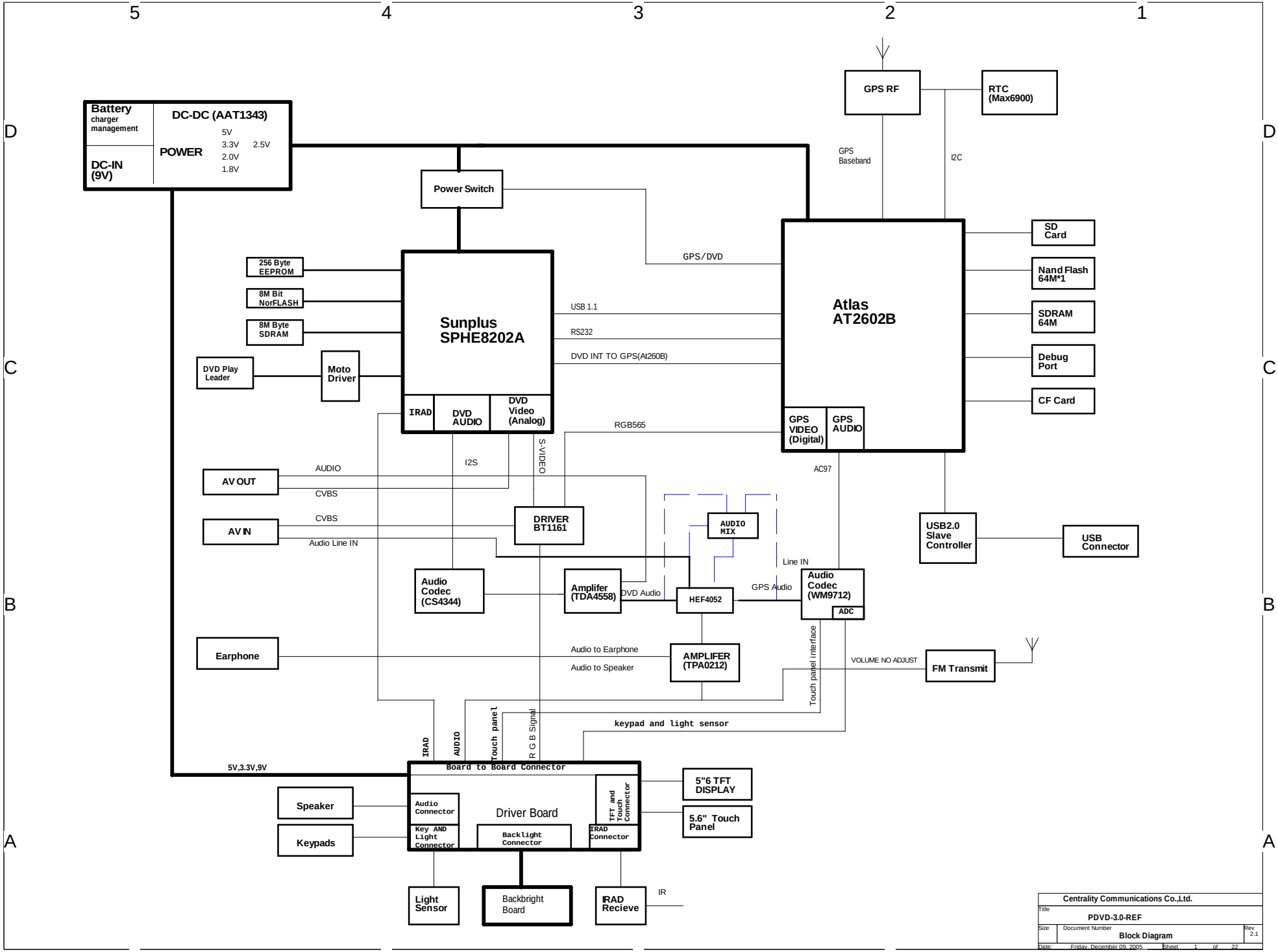

PDF created with pdfFactory trial version www.pdffactory.com

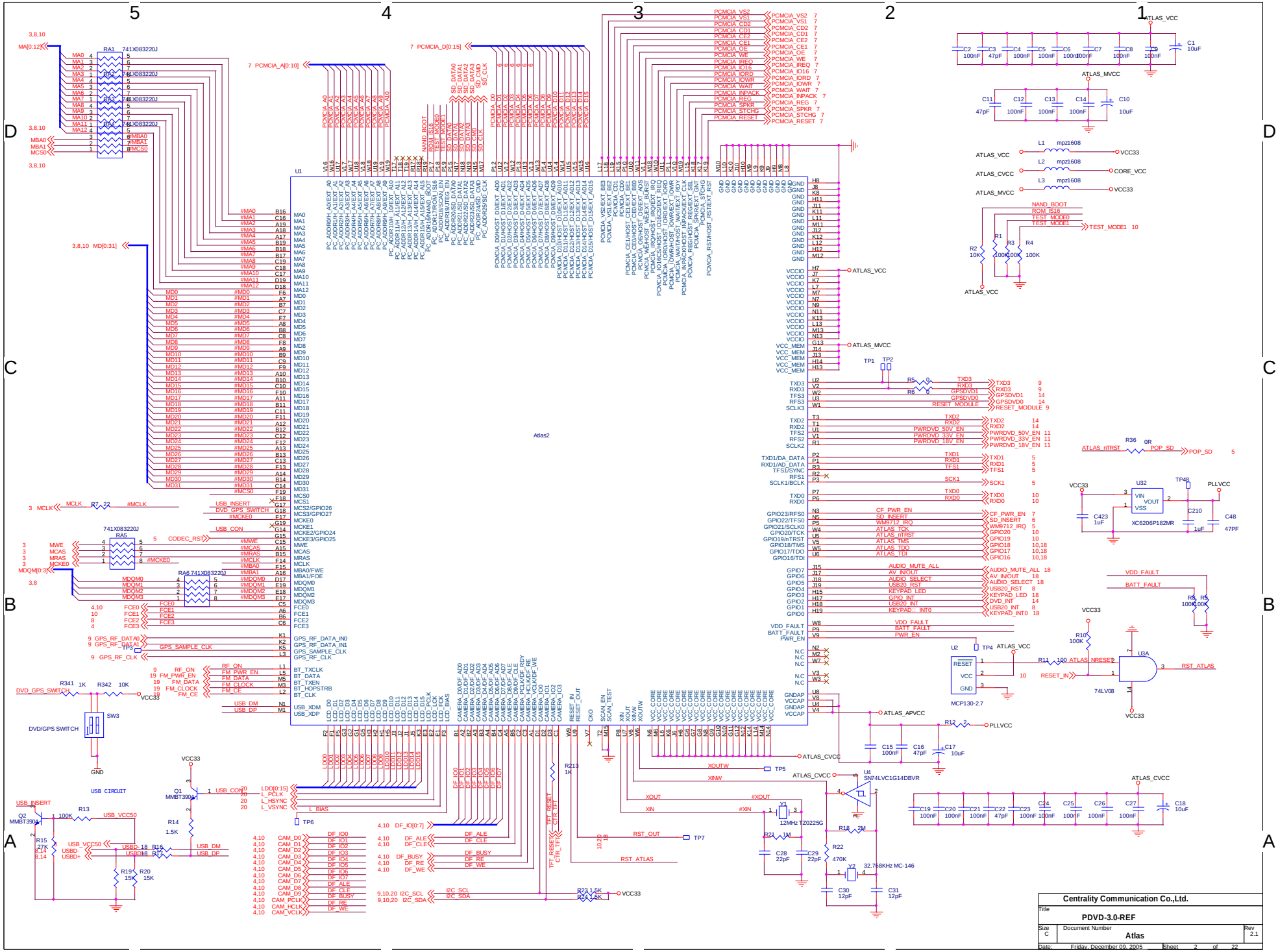

PDF created with pdfFactory trial version www.pdffactory.com

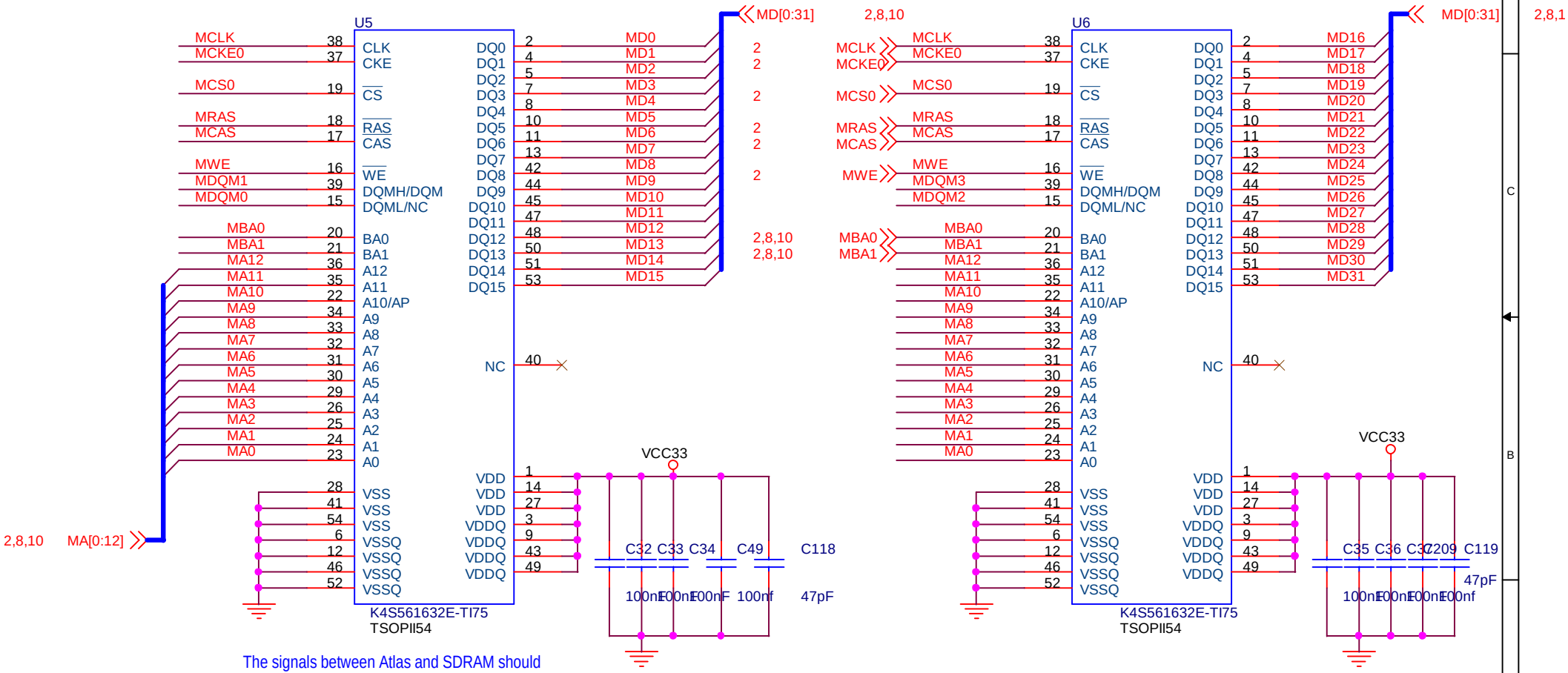

Centrality Communications Co.,Ltd.

Title: **PDVD-3.0-REF**

Size | Document Number: **SDRAM** | Rev 2.1

Date: Friday, December 09, 2005 | Sheet 3 of 22

PDF created with pdfFactory trial version www.pdffactory.com

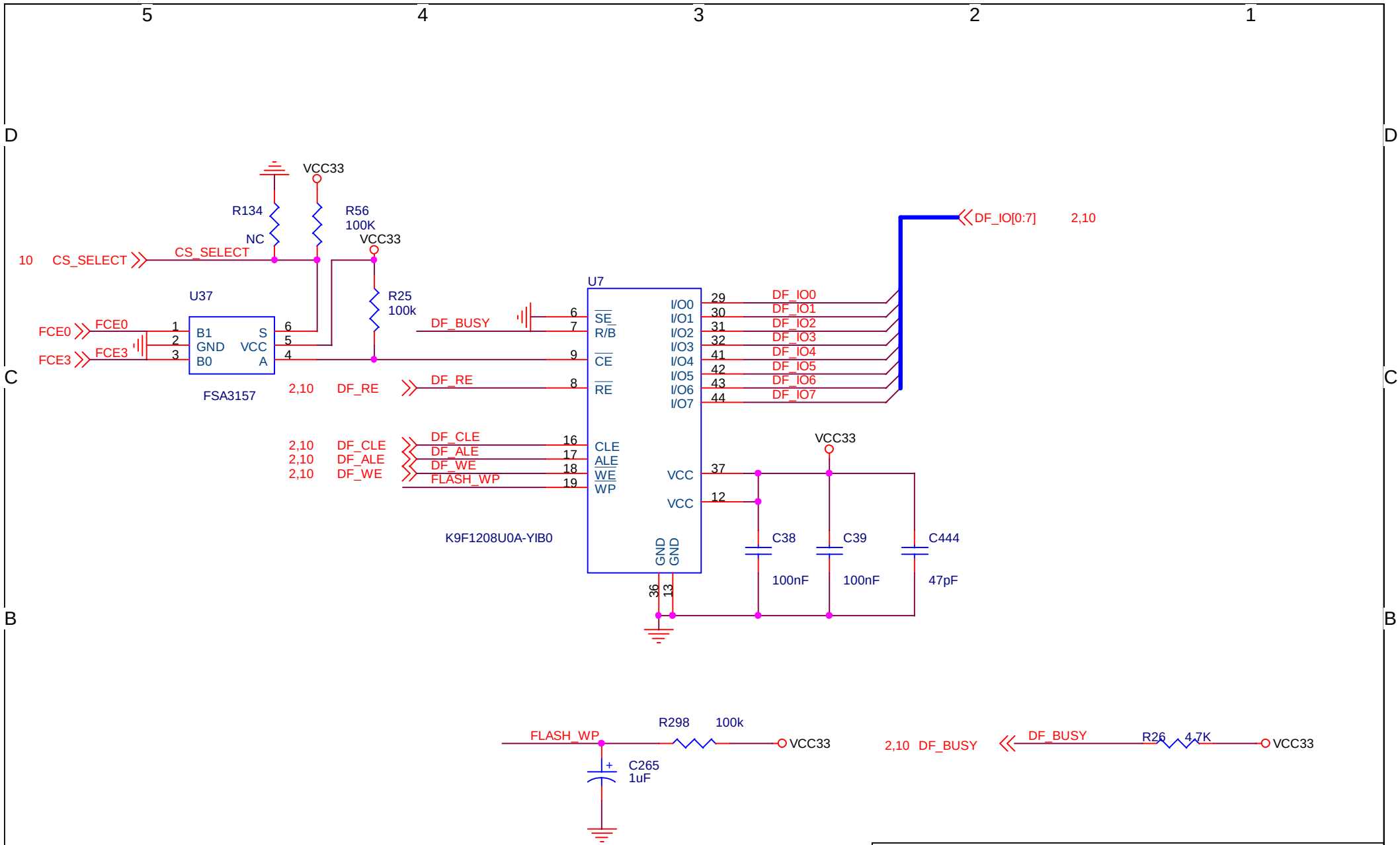

Centrality Communication Co.,Ltd.		
Title: PDVD-3.0-REF		
Size	Document Number: NAND Flash	Rev 2.1
Date: Friday, December 09, 2005	Sheet 4 of 22	

PDF created with pdfFactory trial version www.pdffactory.com

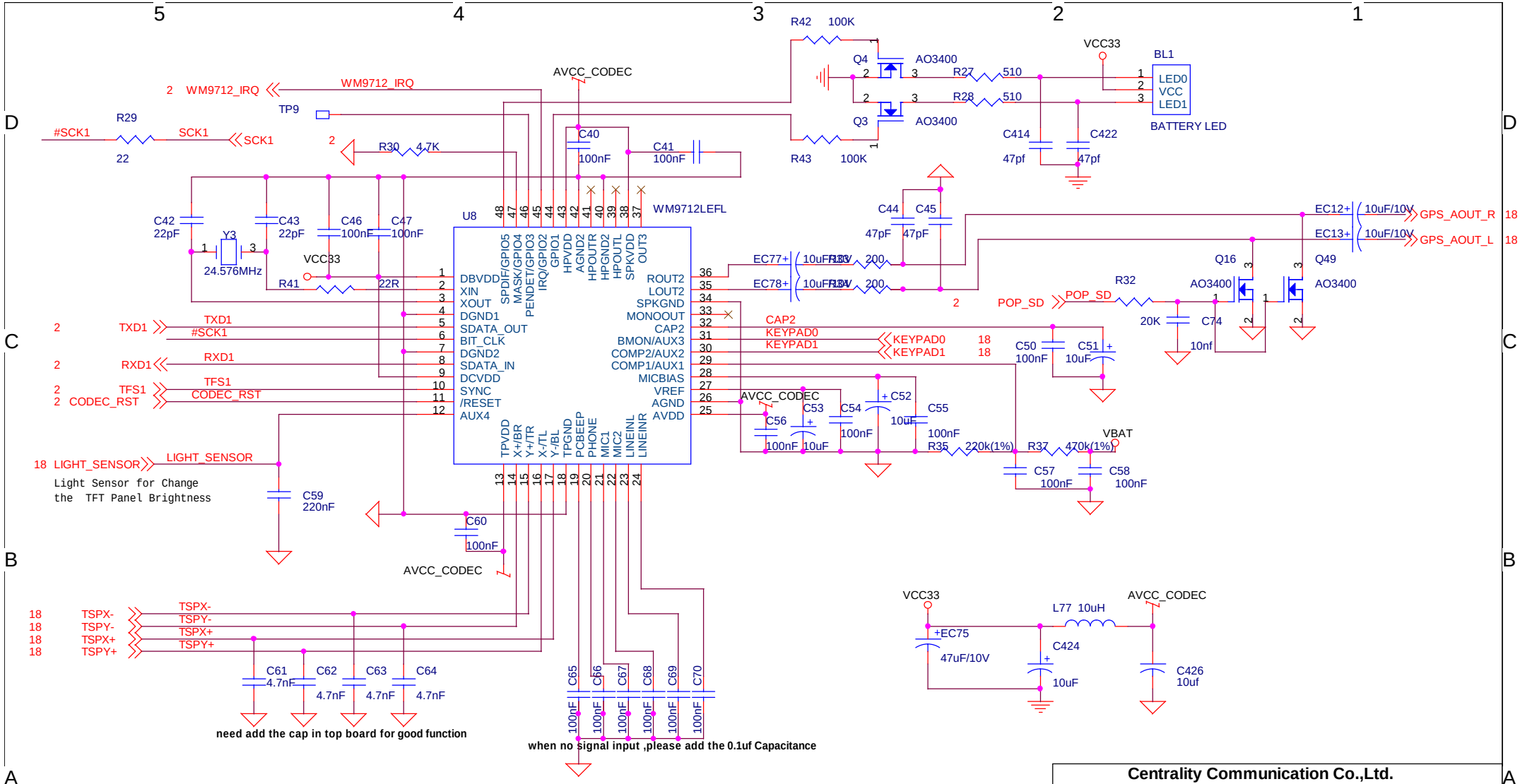

Centrality Communication Co.,Ltd.		
Title: PDVD-3.0-REF		
Size	Document Number: Audio Codec	Rev 2.1
Date: Friday, December 09, 2005	Sheet 5 of 22	

PDF created with pdfFactory trial version www.pdffactory.com

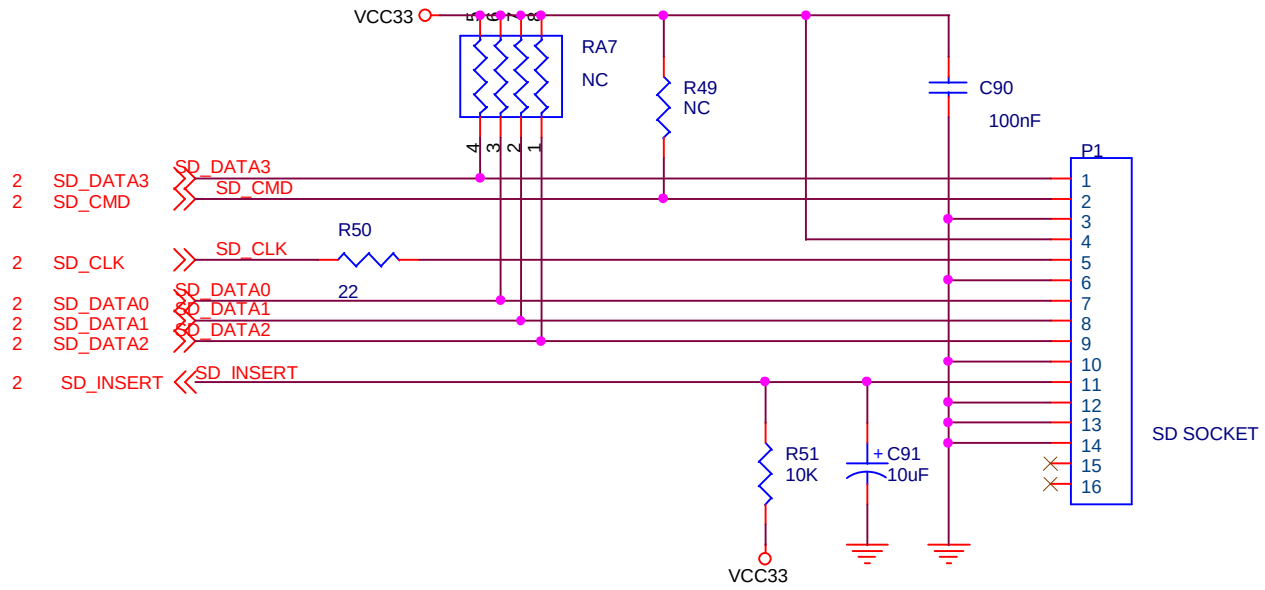

Centrality Communication Co.,Ltd.		
Title PDVD-3.0-REF		
Size A	Document Number SD SOCKET	Rev 2.1
Date: Friday, December 09, 2005	Sheet 6 of 22	

PDF created with pdfFactory trial version www.pdffactory.com

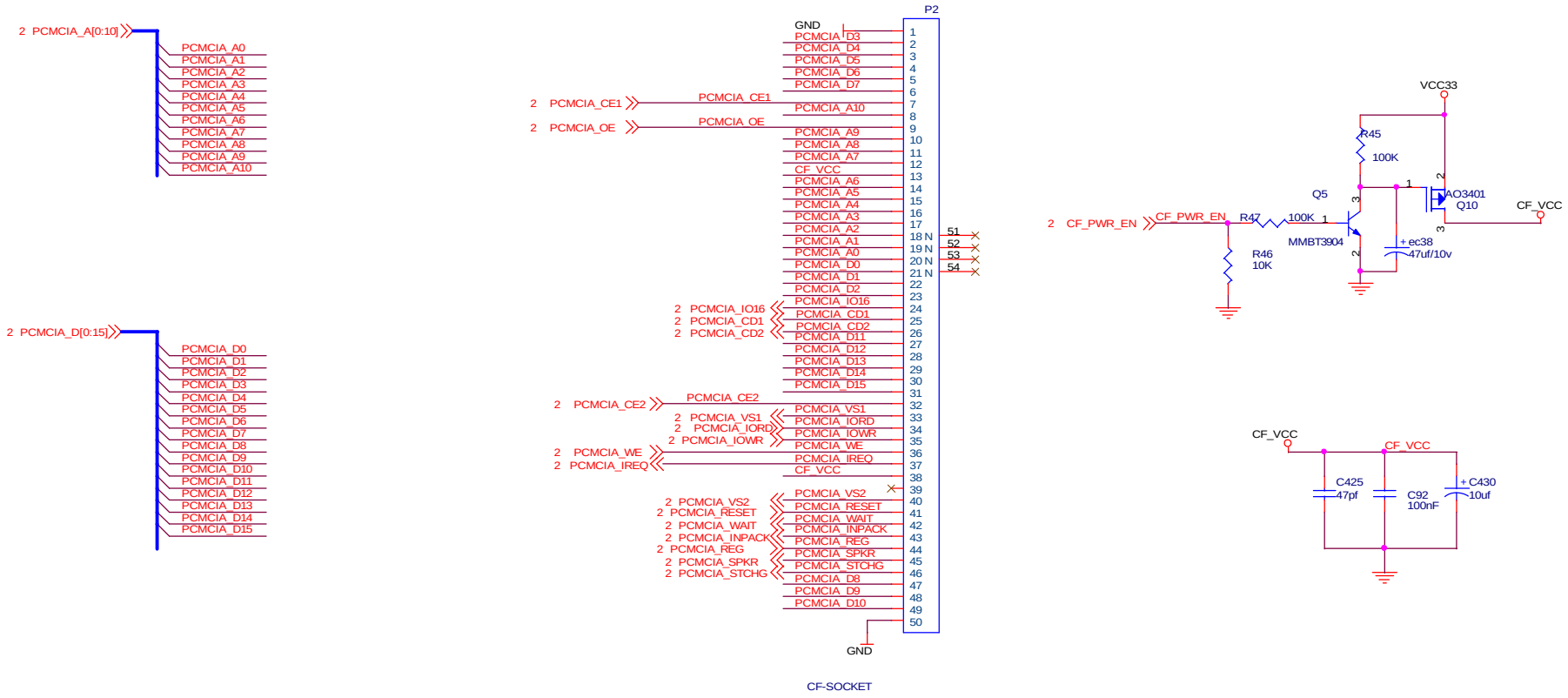

Centrality Communication Co.,Ltd.		
Title: PDVD-3.0-REF		
Size: B	Document Number: Cf and TureIDE	Rev: 2.1
Date: Friday, December 09, 2005	Sheet 7 of 22	

PDF created with pdfFactory trial version www.pdffactory.com

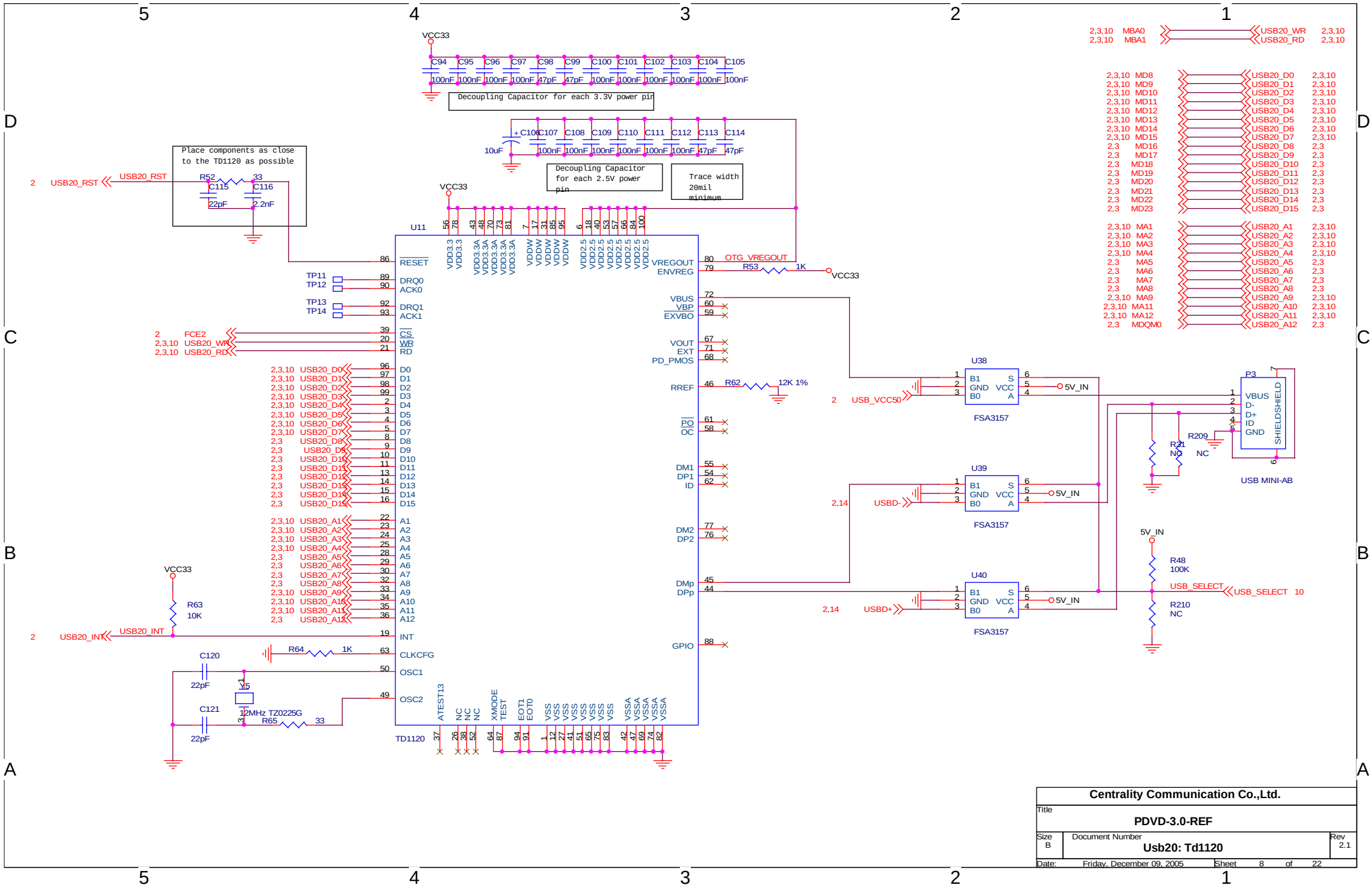

Centrality Communication Co.,Ltd.		
Title: PDVD-3.0-REF		
Size: B	Document Number: Usb20: Td1120	Rev: 2.1
Date: Friday, December 09, 2005	Sheet 8 of 22	

PDF created with pdfFactory trial version www.pdffactory.com

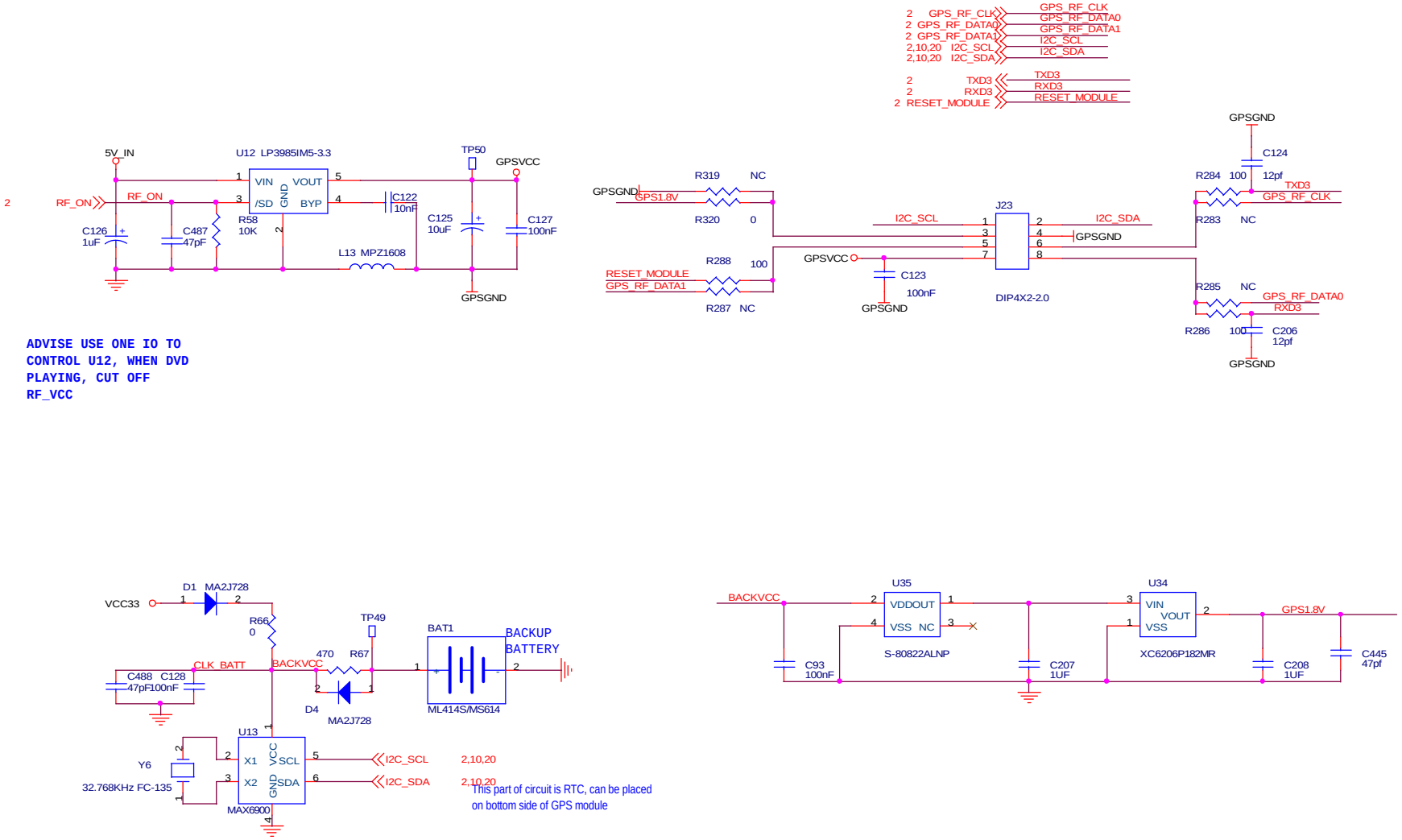

Centrality Communication Co.,Ltd.	
Title	PDVD-3.0-REF
Size B	Document Number: GPS Connector
Rev	2.1
Date:	Friday, December 09, 2005
Sheet	9 of 22

PDF created with pdfFactory trial version www.pdffactory.com

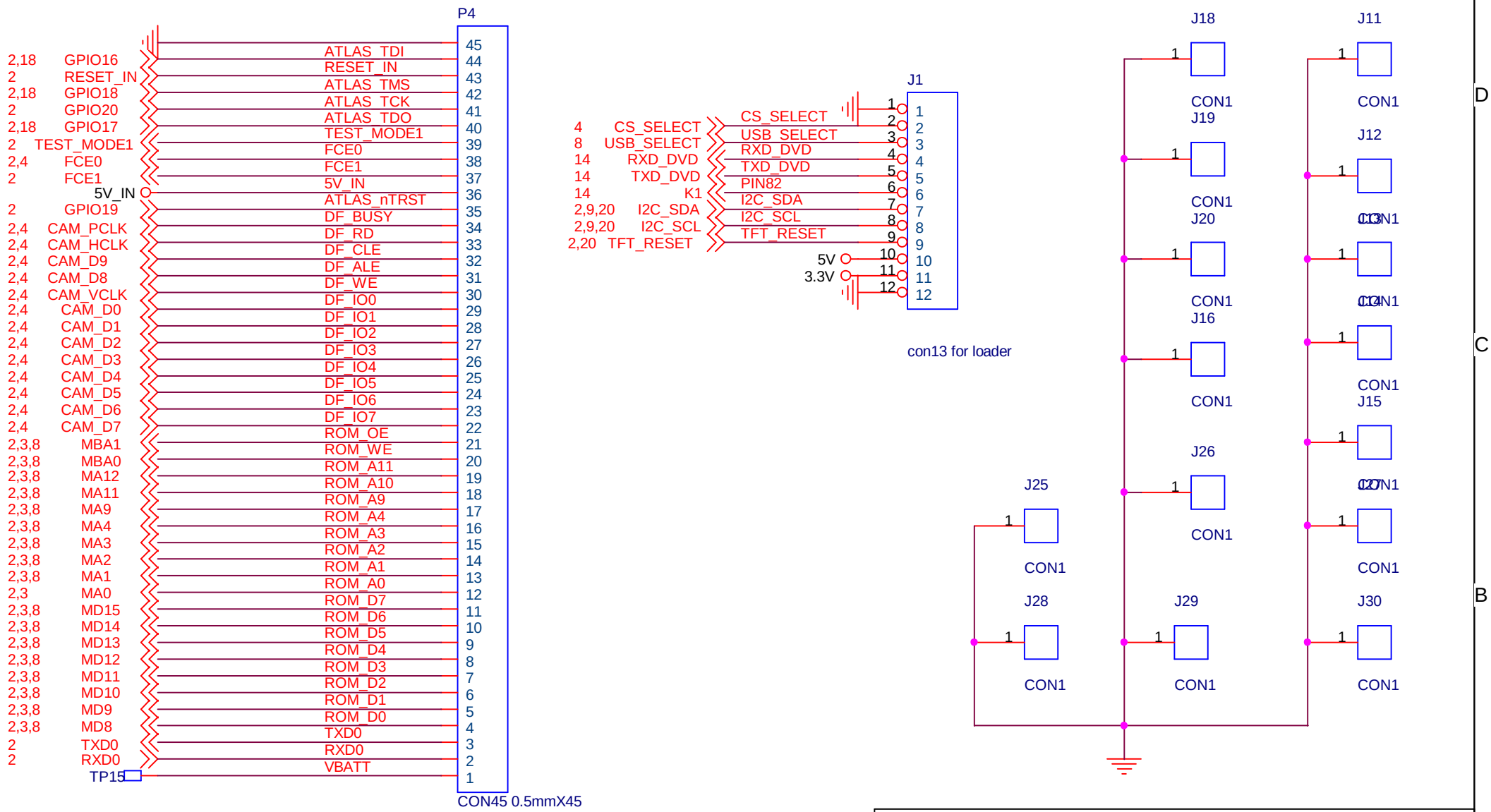

Centrality Communication Co.,Ltd.	
Title	**PDVD-3.0-REF**
Size	Document Number **Debug Port** Rev 2.1
Date: Friday, December 09, 2005	Sheet 10 of 22

PDF created with pdfFactory trial version www.pdffactory.com

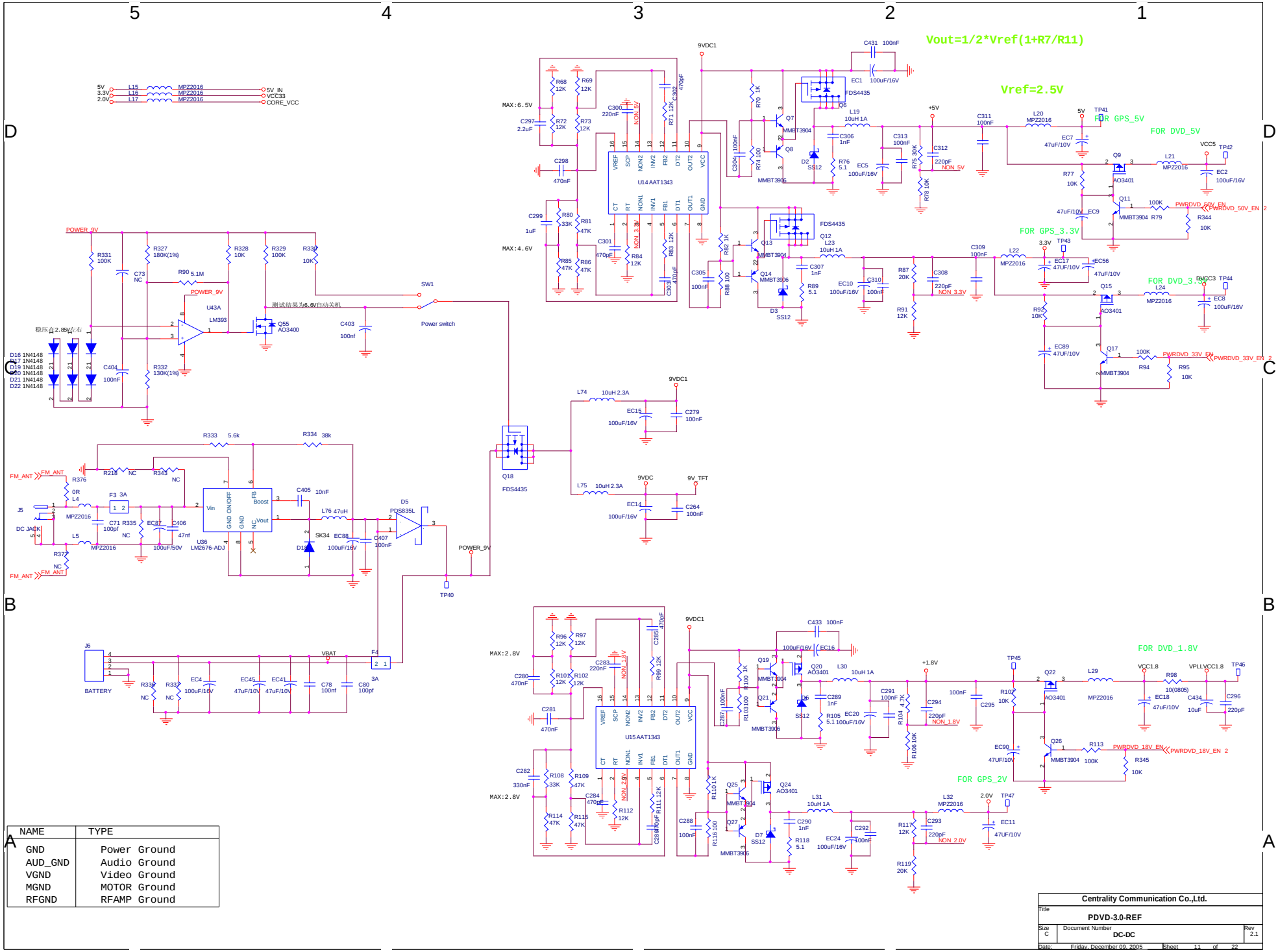

NAME	TYPE
GND	Power Ground
AUD_GND	Audio Ground
VGND	Video Ground
MGND	MOTOR Ground
RFGND	RFAMP Ground

Centrality Communication Co.,Ltd.

Title: PDVD-3.0-REF

Size: C | Document Number: DC-DC | Rev: 2.1

Date: Friday, December 09, 2005 | Sheet 11 of 22

PDF created with pdfFactory trial version www.pdffactory.com

5V POWER FOR VIDEO BUFFER AND LASER

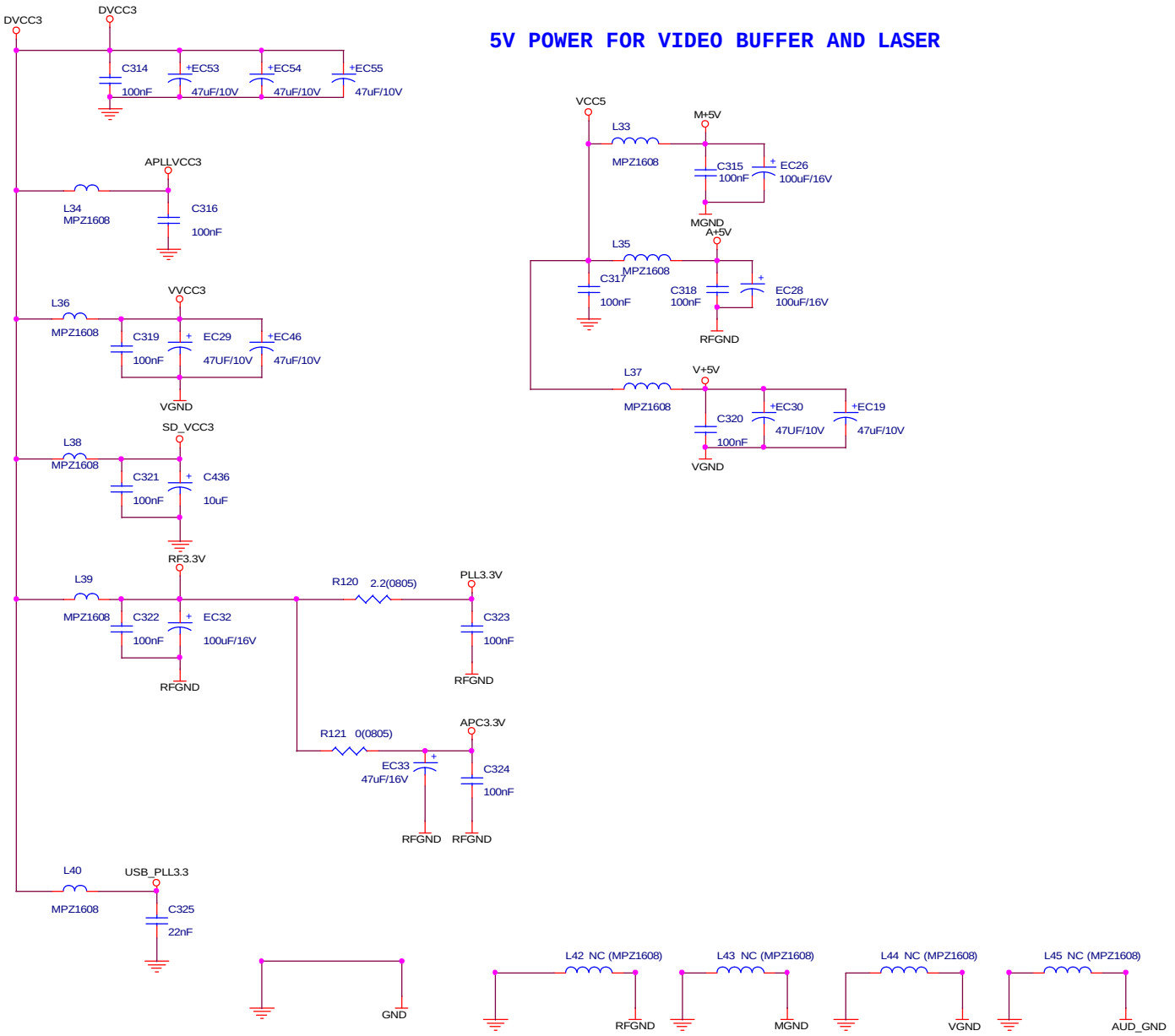

Centrality Communication Co.,Ltd.		
Title: PDVD-3.0-REF		
Size: B	Document Number: POWER DVD	Rev: 2.1
Date: Friday, December 09, 2005	Sheet 12 of 22	

PDF created with pdfFactory trial version www.pdffactory.com

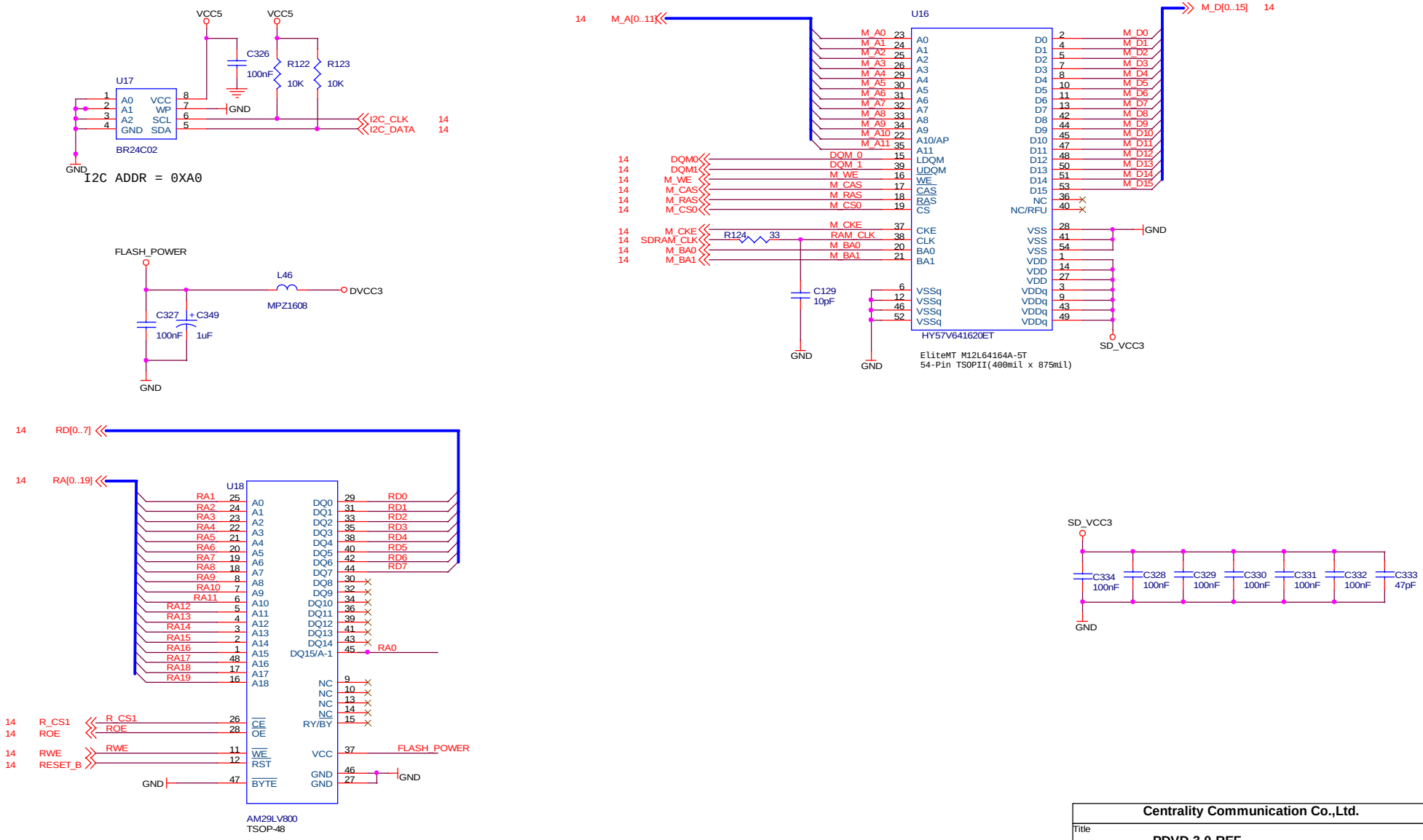

Centrality Communication Co.,Ltd.		
Title: PDVD-3.0-REF		
Size: B	Document Number: MEMORY DVD	Rev: 2.1
Date: Friday, December 09, 2005	Sheet 13 of 22	

PDF created with pdfFactory trial version www.pdffactory.com

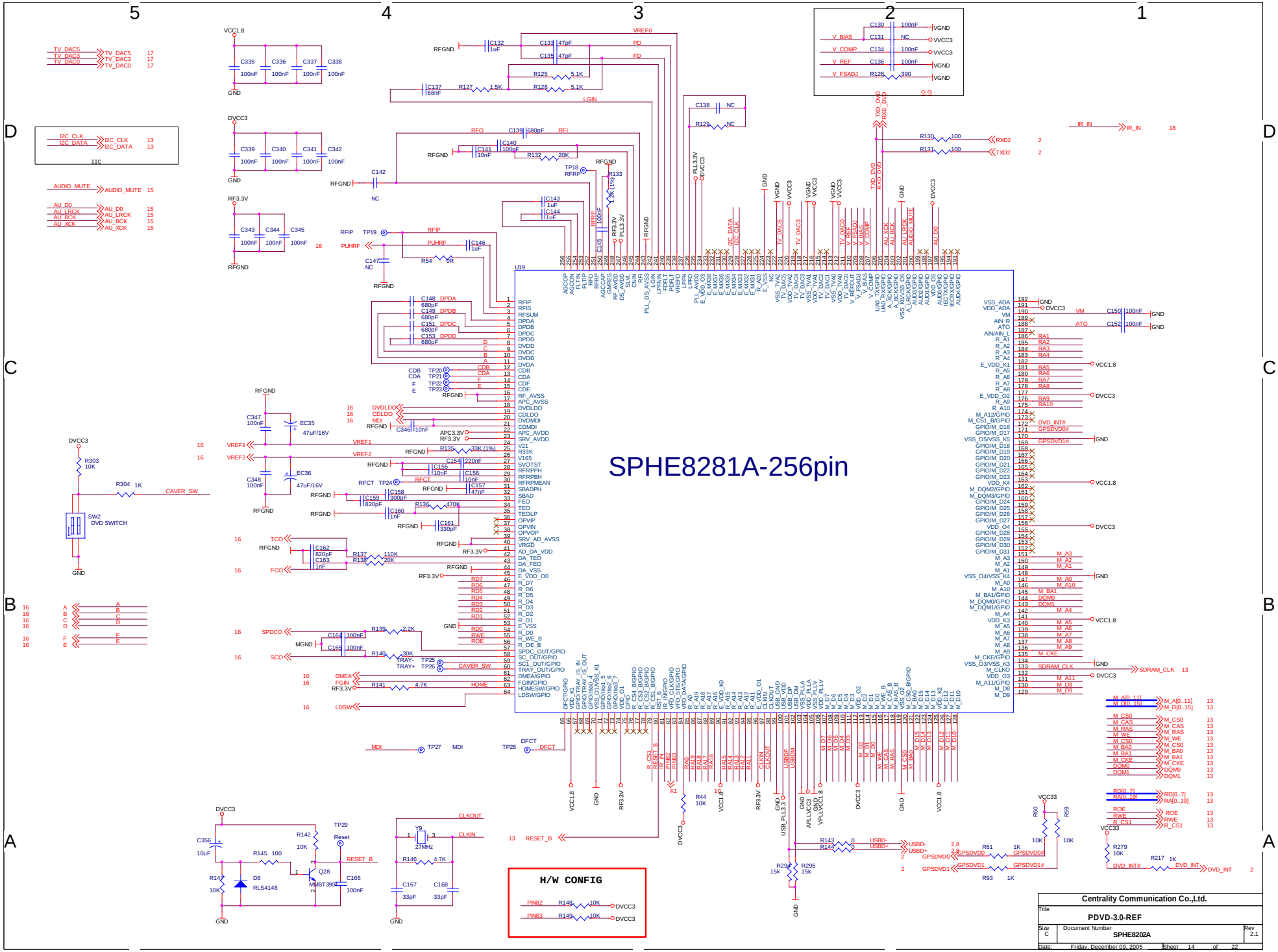

PDF created with pdfFactory trial version www.pdffactory.com

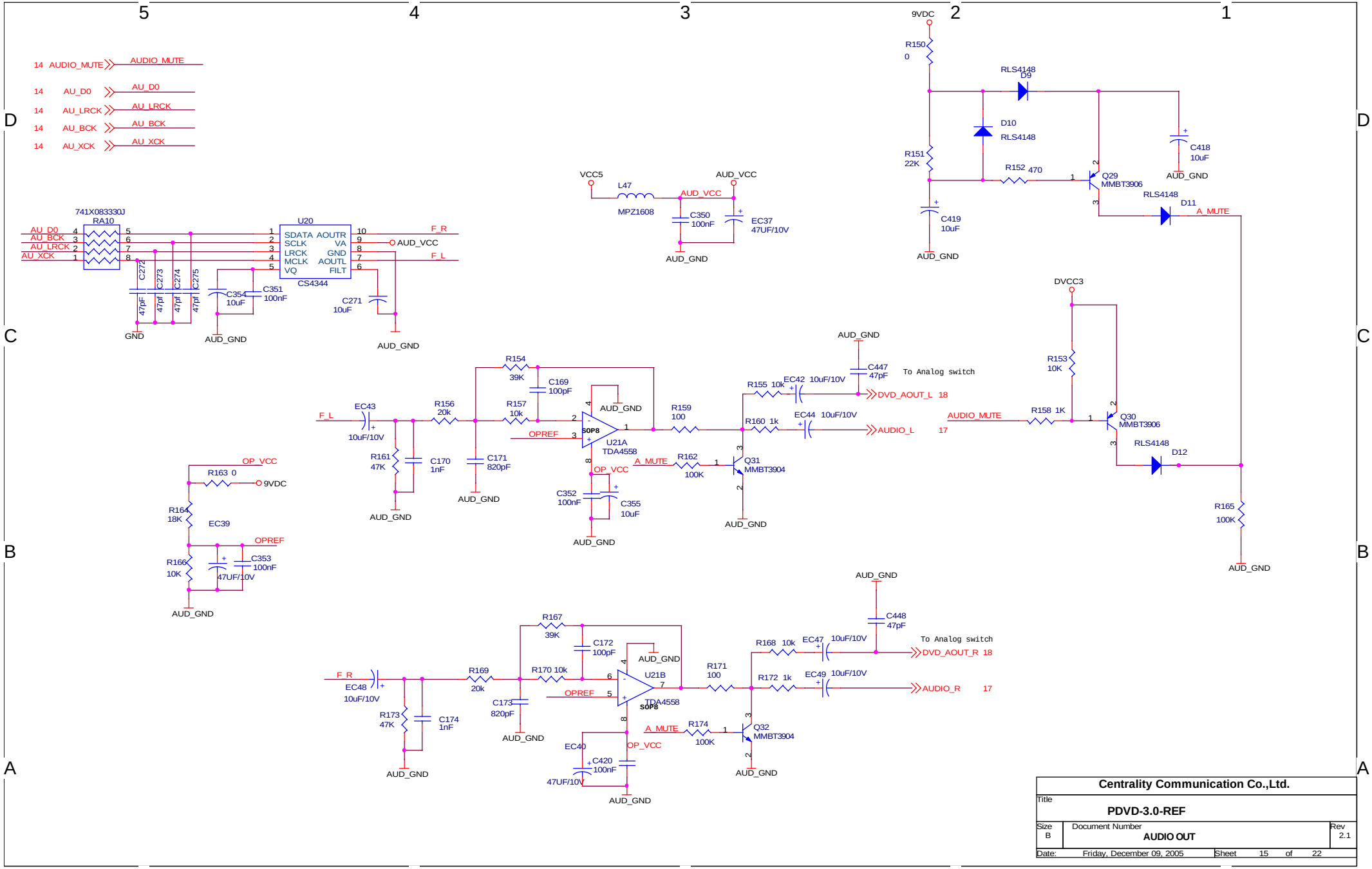

PDF created with pdfFactory trial version www.pdffactory.com

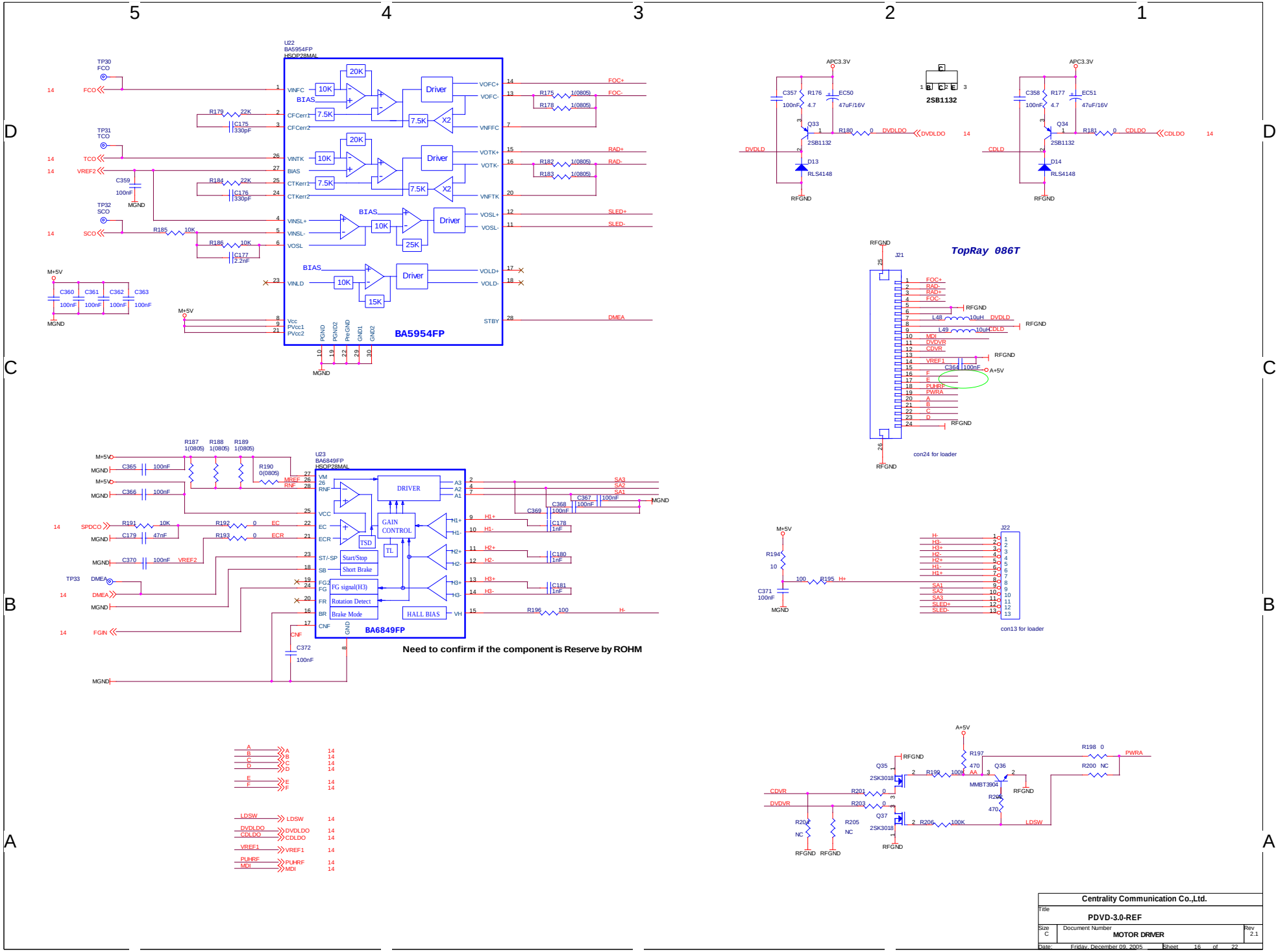

Centrality Communication Co.,Ltd.		
Title: PDVD-3.0-REF		
Size: C	Document Number: MOTOR DRIVER	Rev: 2.1
Date: Friday, December 09, 2005	Sheet 16 of 22	

PDF created with pdfFactory trial version www.pdffactory.com

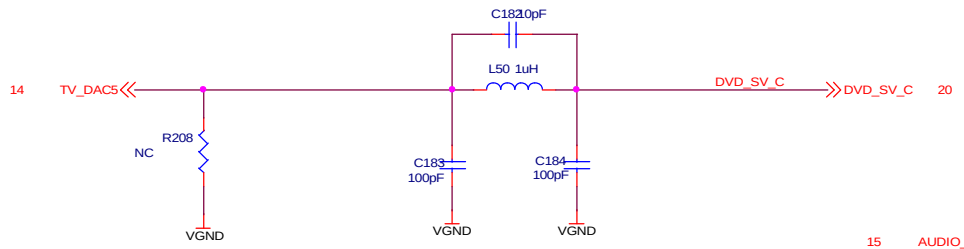

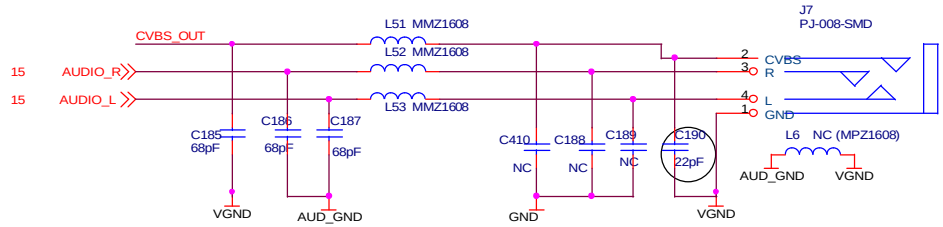

AV OUT CONNECTOR

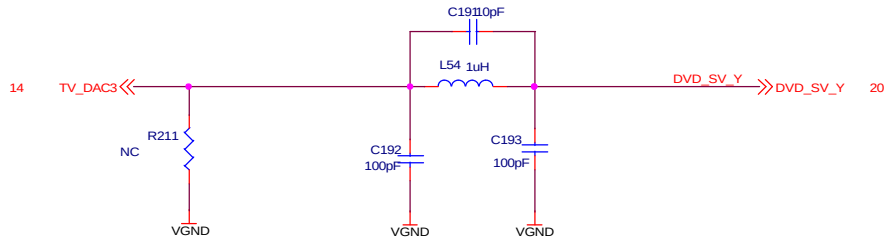

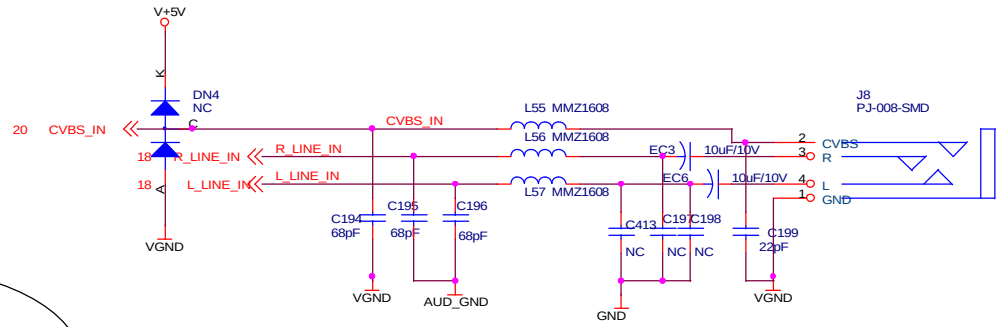

AV in CONNECTOR

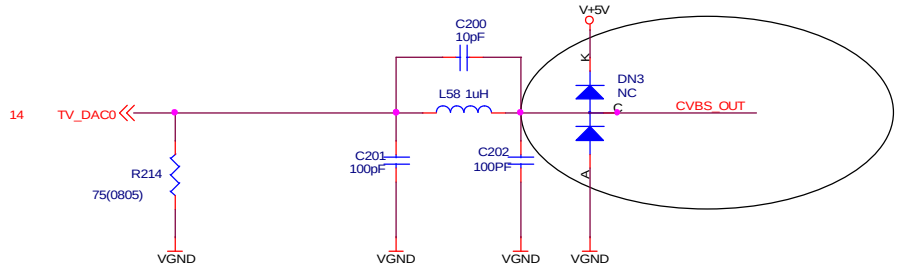

Centrality Communication Co.,Ltd.		
Title: PDVD-3.0-REF		
Size: B	Document Number: VEDIO OUT	Rev: 2.1
Date: Friday, December 09, 2005	Sheet 17 of 22	

PDF created with pdfFactory trial version www.pdffactory.com

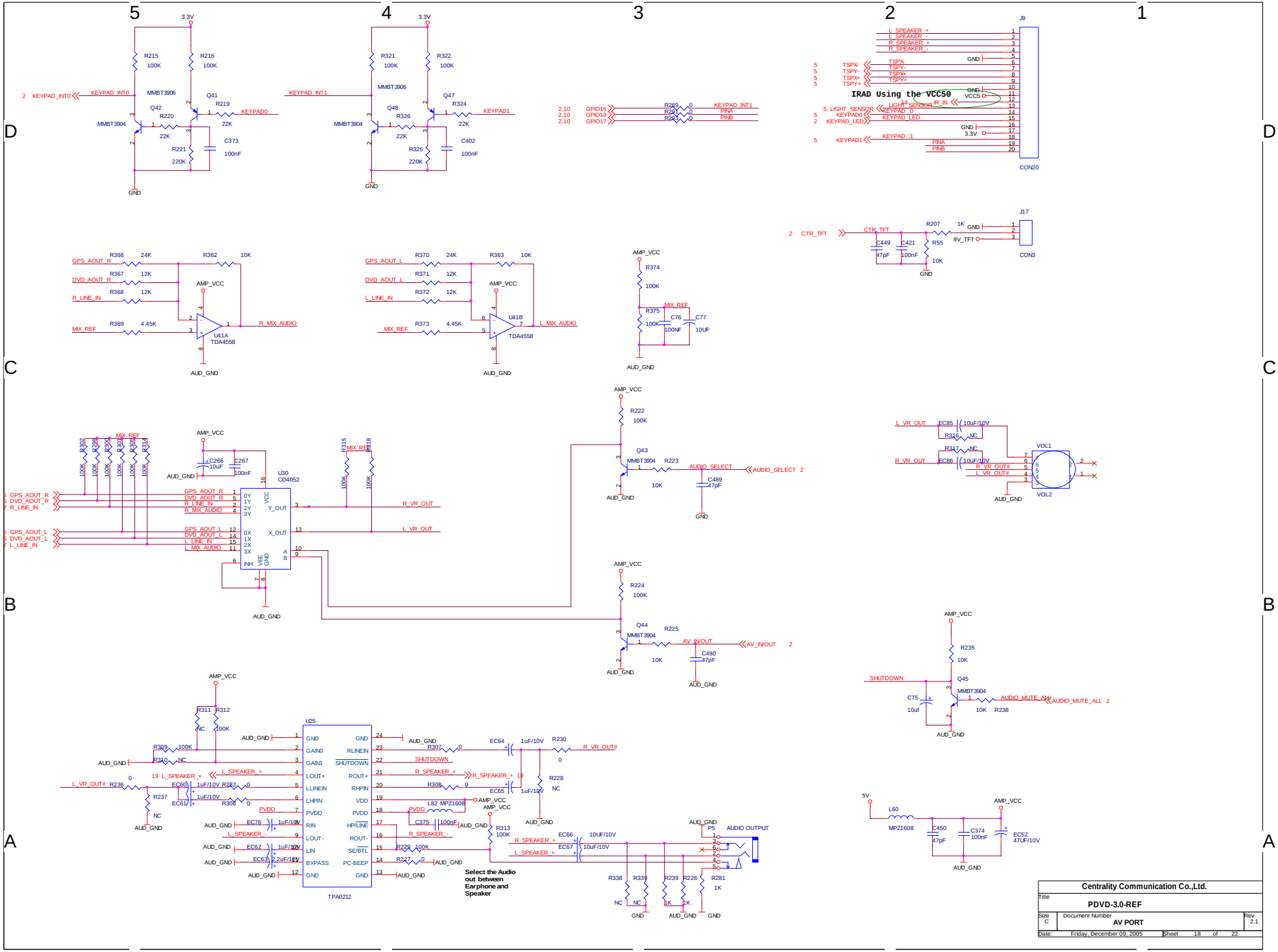

PDF created with pdfFactory trial version www.pdffactory.com

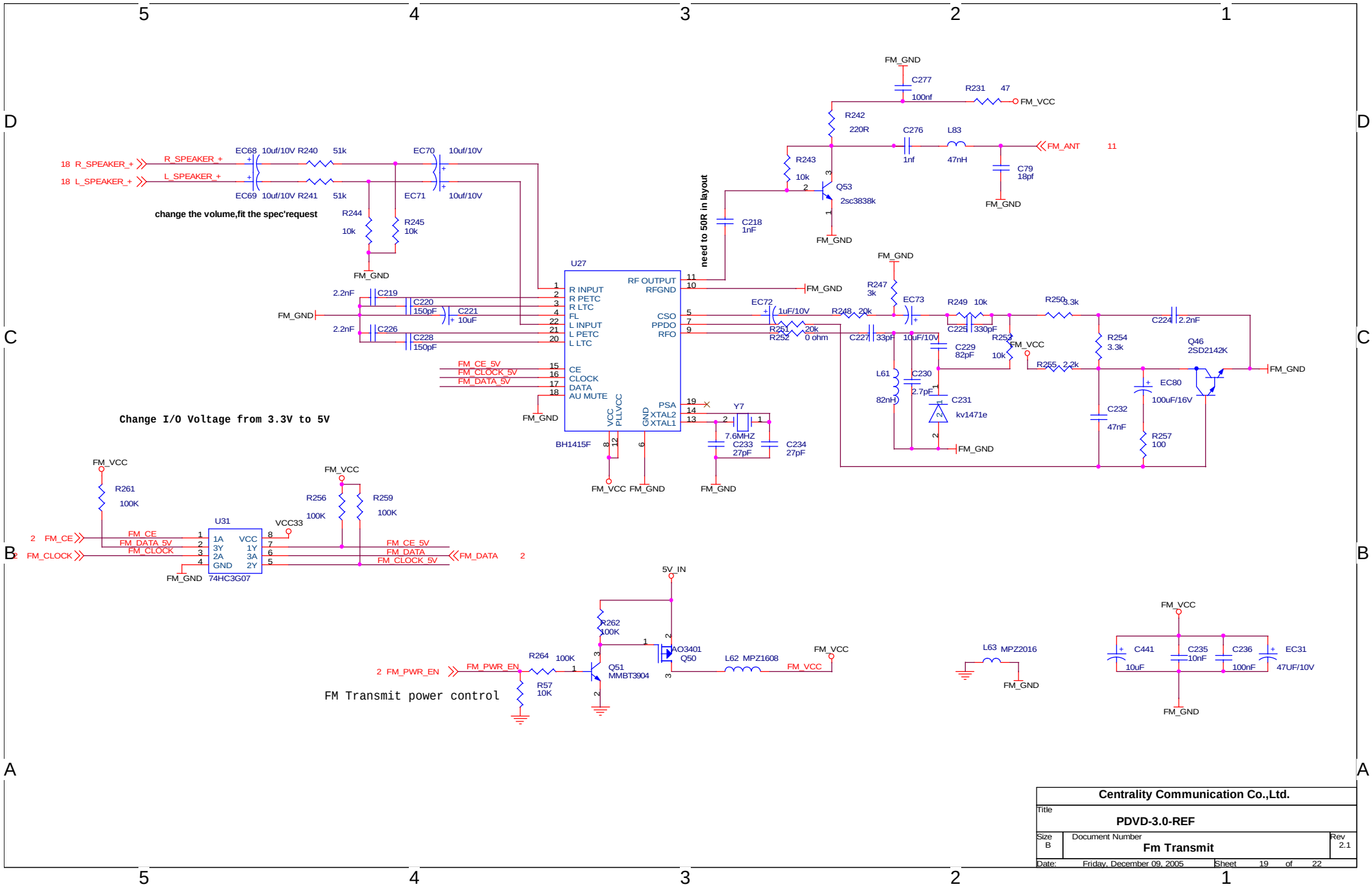

Centrality Communication Co.,Ltd.		
Title: PDVD-3.0-REF		
Size: B	Document Number: Fm Transmit	Rev: 2.1
Date: Friday, December 09, 2005	Sheet 19 of 22	

PDF created with pdfFactory trial version www.pdffactory.com

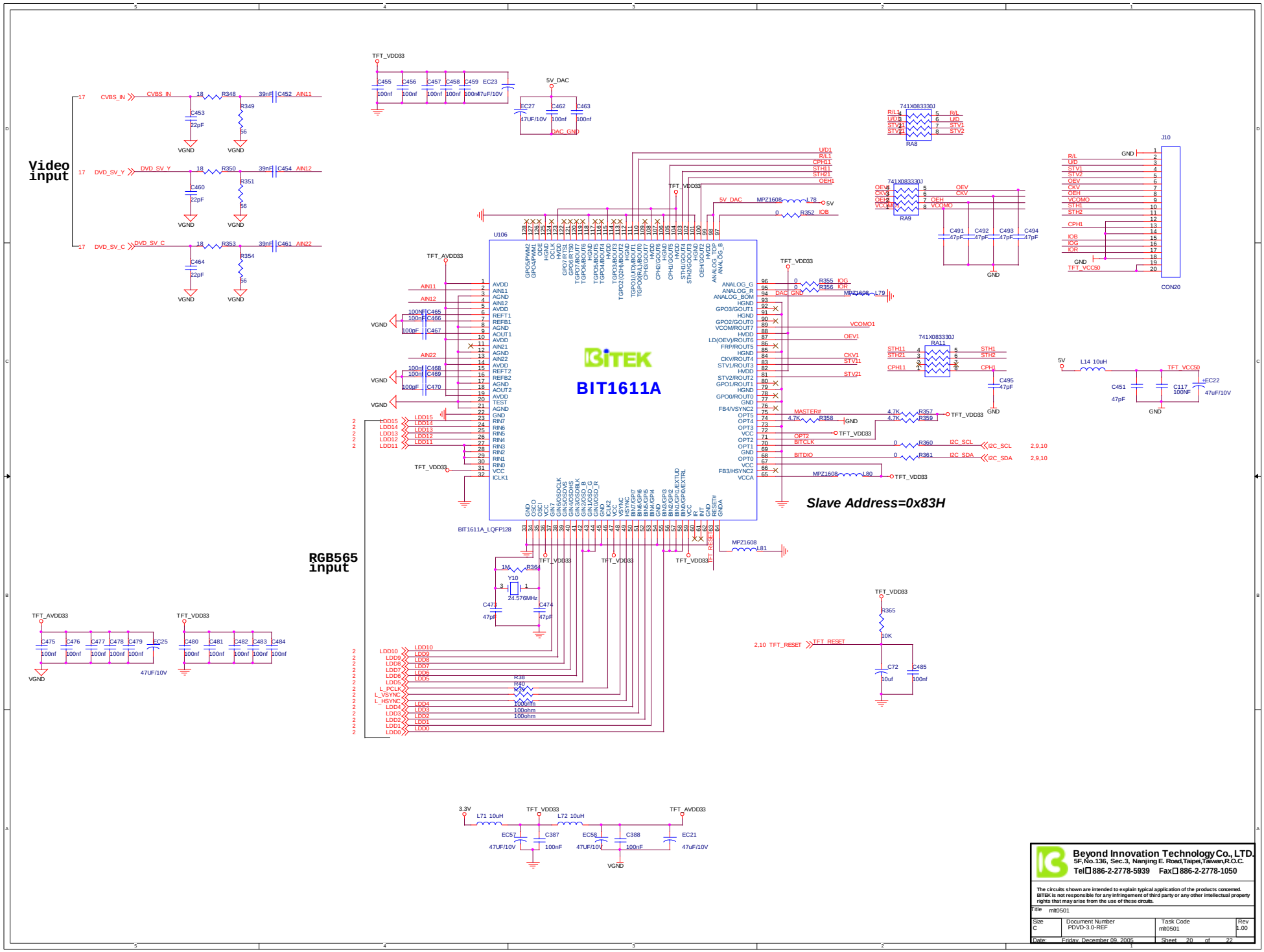

PDF created with pdfFactory trial version www.pdffactory.com

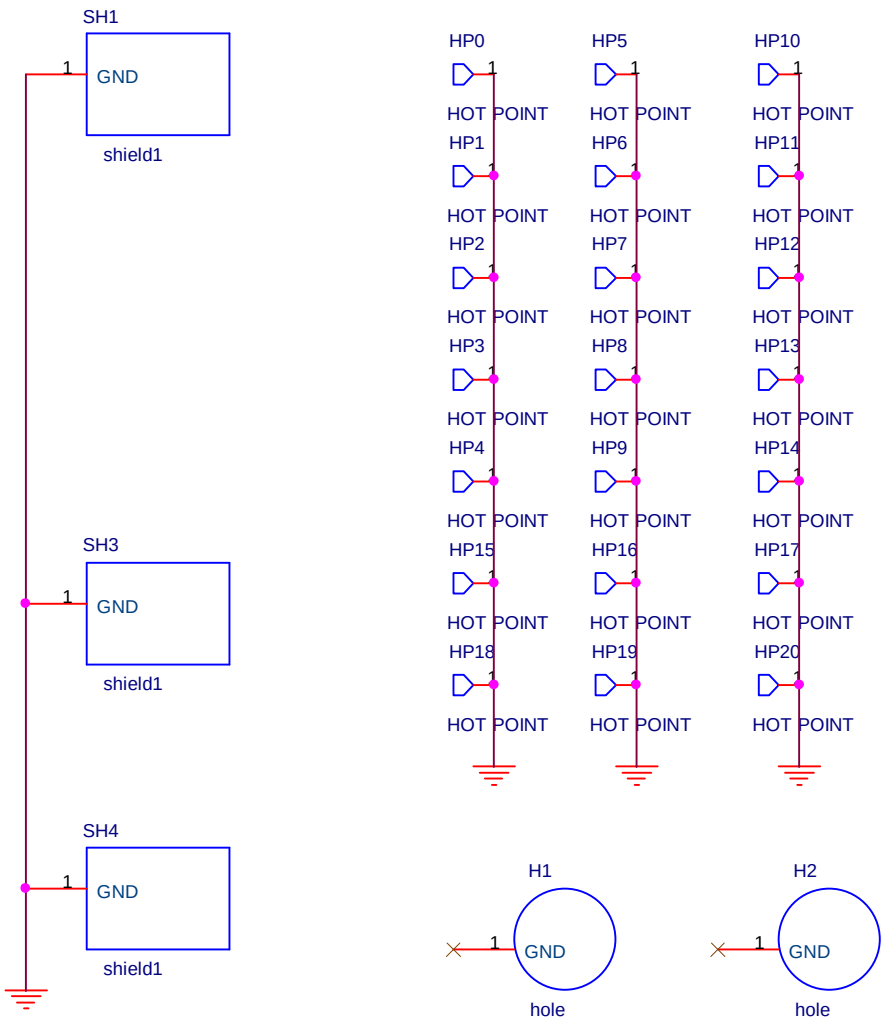

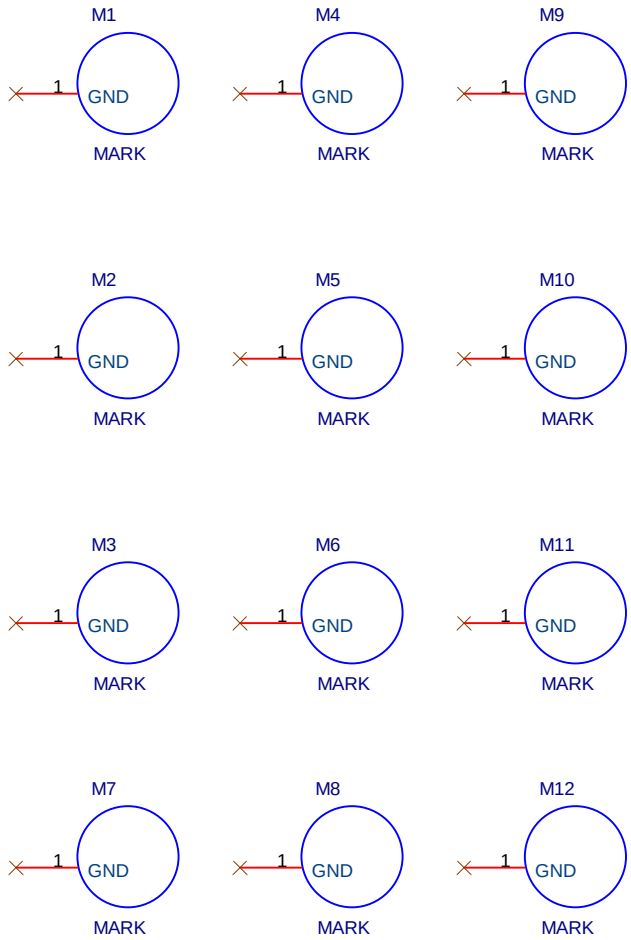

Centrality Communication Co.,Ltd.

Title	PDVD-3.0-REF	
Size A	Document Number **Placement**	Rev 2.1
Date: Friday, December 09, 2005	Sheet 21 of 22	

PDF created with pdfFactory trial version www.pdffactory.com

VOLUME_CS

GPIO ASSIGNMENT

	Usage
GPIO0	KEYPAD_INT0
GPIO1	USB20_INT
GPIO2	DVD_INT
GPIO3	KEYPAD_LED
GPIO4	USB20_RST
GPIO5	AUDIO_SELECT
GPIO6	AV_IN/OUT
GPIO7	AUDIO_MUTE_ALL
GPIO16	Atlas TDI/KEYPAD_INT1
GPIO17	Atlas TDO/PINB
GPIO18	Atlas_TMS/PINA
GPIO19	Atlas nTRST
GPIO20	Atlas TCK
GPIO21	WM9712 IRQ
GPIO22	SD_INSERT
GPIO23	CF_PWR_EN
GPIO24	USB_CON
GPIO25	CODEC_RST
GPIO26	USB Insert
GPIO27	DVD_GPS_SWITCH

OTHERS IO ASSIGNMENT

	Usage	Attribute
OTIO0	RF_ON	BT
OTIO1	FM_PWR_ON	BT
OTIO2	FM_DATA	BT
OTIO3	FM_CLOCK	BT
OTIO4	FM_CE	BT
OTIO5	BATTERY_LED2	WM9712
OTIO6	BATTERY_LED1	WM9712
OTIO7	GPSDVD0	USP3
OTIO8	GPSDVD1	USP3
OTIO9	CTR_TFT	CAMERA IO
OTIO10	TFT_RESET	CAMERA IO
OTIO11	RESET_MODULE	USP3
OTIO12	PWRDVD_50V_EN	USP2
OTIO13	PWRDVD_33V_EN	USP2
OTIO14	PWRDVD_18V_EN	USP2

Centrality Communication Co.,Ltd.			
Title PDVD-3.0-REF			
Size B	Document Number NOTE		Rev 2.1
Date: Friday, December 09, 2005		Sheet 22 of 22	

PDF created with pdfFactory trial version www.pdffactory.com