REVISION RECORD			
LTR	ECO NO:	APPROVED:	DATE:

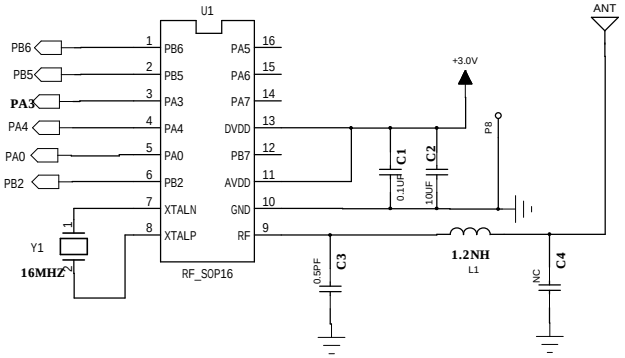

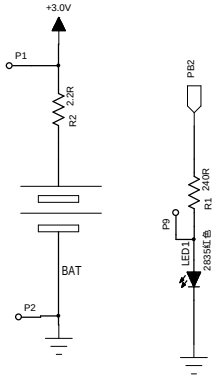

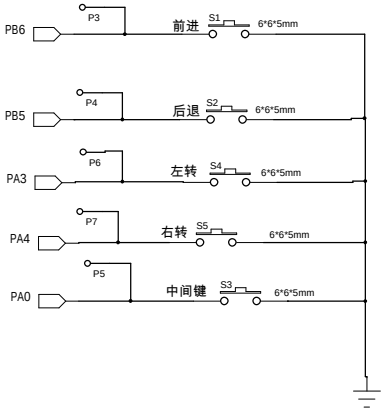

DRAWN:	DATED: 2020.07.07	COMPANY: 宝威玩具有限公司			
CHECKED:	DATED:	TITLE: BW-DG1132TX			
QUALITY CONTROL:	DATED:	CODE:	SIZE: B	DRAWING NO:	REV:1.2
RELEASED:	DATED:	SCALE:		SHEET: 1 OF 1	