REVISION RECORD			
LTR	ECO NO:	APPROVED:	DATE:

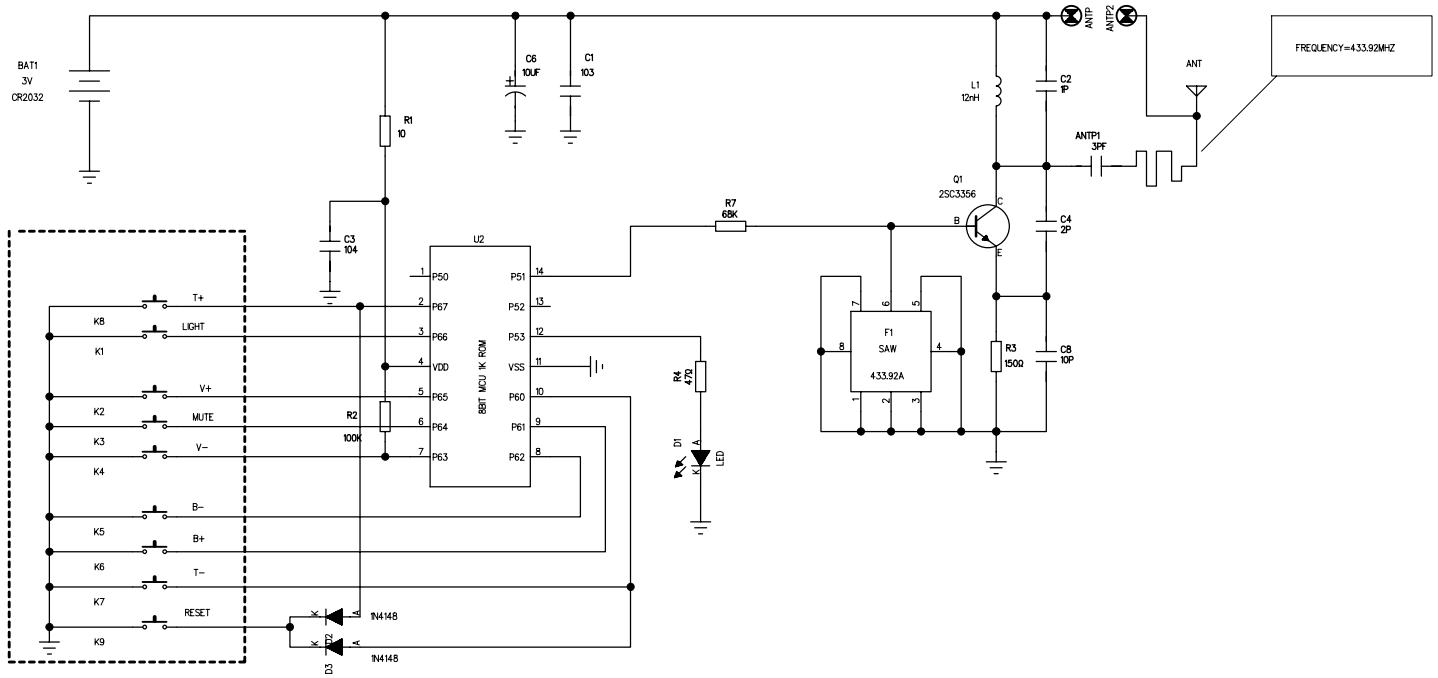

COMPANY:				
TITLE:				
DRAWN:	DATED:			
CHECKED:	DATED:	CODE:	SIZE:	DRAWING NO:	REV:
QUALITY CONTROL:	DATED:			
RELEASED:	DATED:	SCALE:		SHEET: OF