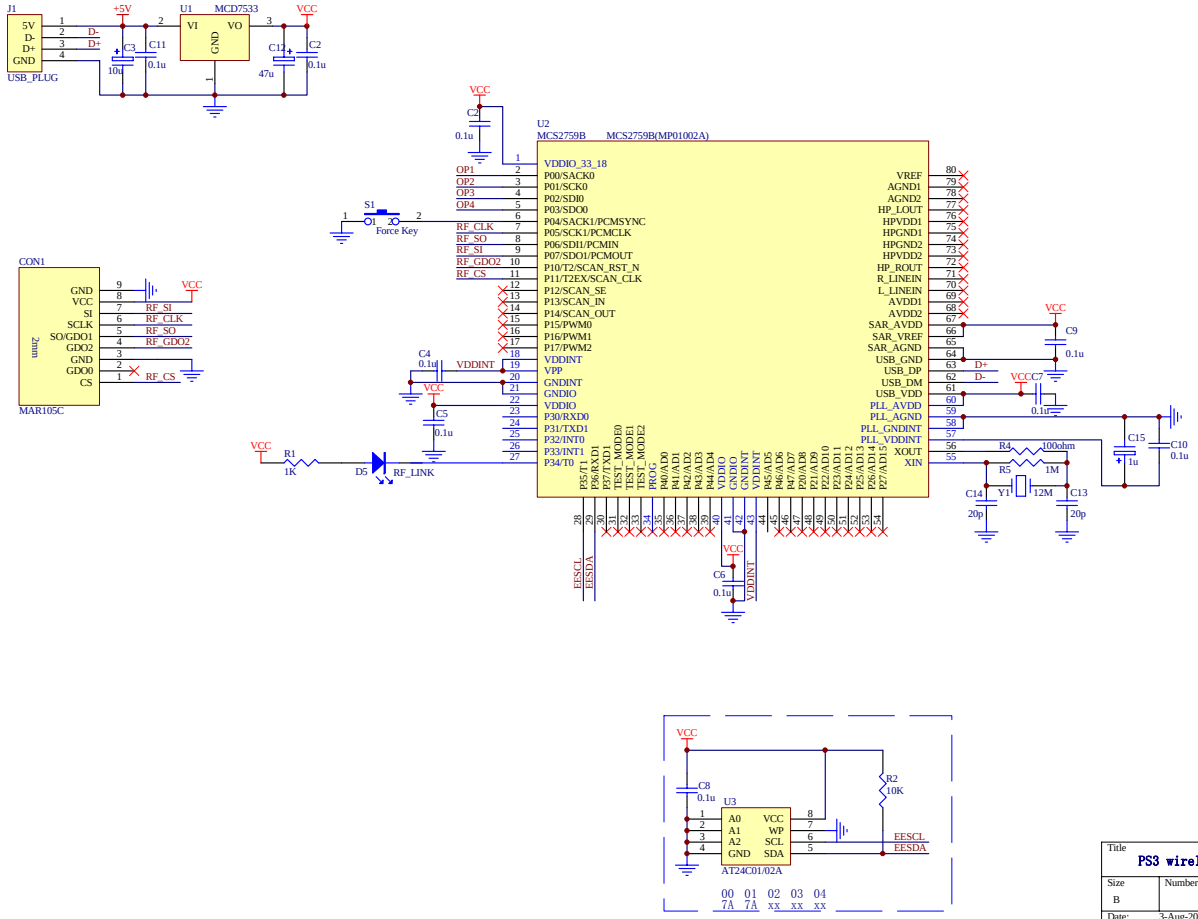
J1
5V
D-
D+
GND
USB_PLUG
+5V
U1
MCD7533
VI
VO
GND
VCC
C3
10u
C11
0.1u
C12
47u
C2
0.1u
U2
MCS2759B
MCS2759B(MP01002A)
VDDIO_33_18
P00/SACK0
P01/SCK0
P02/SDI0
P03/SDO0
P04/SACK1/PCMSYNC
P05/SCK1/PCMCLK
P06/SDI1/PCMIN
P07/SDO1/PCMOUT
P10/T2/SCAN_RST_N
P11/T2EX/SCAN_CLK
P12/SCAN_SE
P13/SCAN_IN
P14/SCAN_OUT
P15/PWM0
P16/PWM1
P17/PWM2
VDDINT
VPP
GNDINT
GNDIO
VDDIO
P30/RXD0
P31/TXD1
P32/INT0
P33/INT1
P34/T0
VREF
AGND1
AGND2
HP_LOUT
HPVDD1
HPGND1
HPGND2
HPVDD2
HP_ROUT
R_LINEIN
L_LINEIN
AVDD1
AVDD2
SAR_AVDD
SAR_VREF
SAR_AGND
USB_GND
USB_DP
USB_DM
USB_VDD
PLL_AVDD
PLL_AGND
PLL_GNDINT
PLL_VDDINT
XOUT
XIN
OP1
OP2
OP3
OP4
RF_CLK
RF_SO
RF_SI
RF_GDO2
RF_CS
S1
Force Key
CON1
MAR105C
GND
VCC
SI
SCLK
SO/GDO1
GDO2
GDO0
CS
RF_SI
RF_CLK
RF_SO
RF_GDO2
RF_CS
C4
0.1u
VDDINT
C5
0.1u
R1
1K
D5
RF_LINK
C9
0.1u
C7
0.1u
D+
D-
R4
100ohm
R5
1M
Y1
12M
C14
20p
C13
20p
C15
1u
C10
0.1u
EESCL
EESDA
C6
0.1u
VDDINT
C8
0.1u
U3
A0
A1
A2
GND
VCC
WP
SCL
SDA
AT24C01/02A
R2
10K
00 01 02 03 04
7A 7A xx xx xx
Title
PS3 wireless receiver
Size
B
Number
Revision
1.01
Date:
3-Aug-2007
Sheet of
File:
C:\Documents and Settings\lijk\桌面\FCC\PS3 MCS2759B(MP01002A).DDB