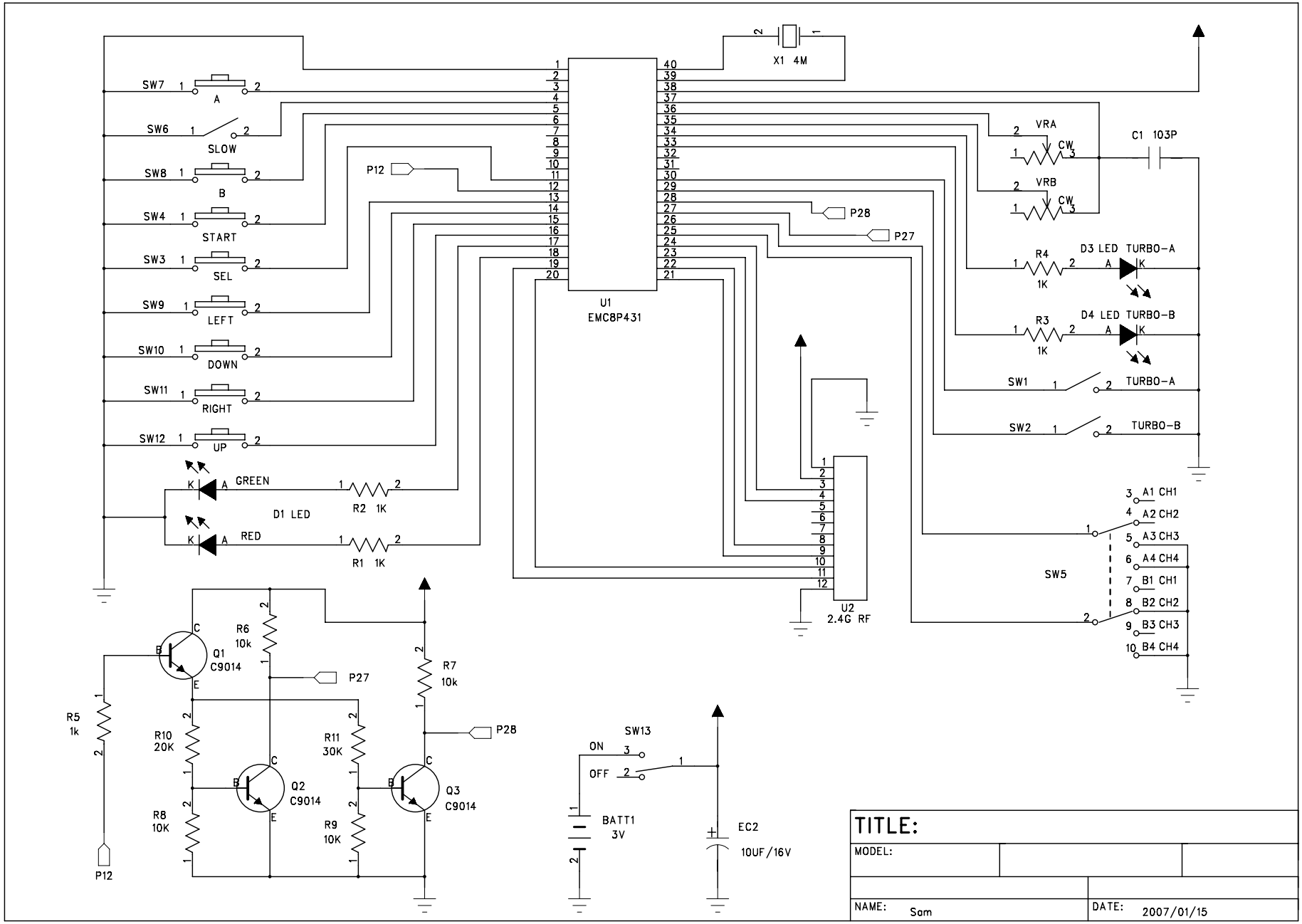
SW7
A
SW6
SLOW
SW8
B
SW4
START
SW3
SEL
SW9
LEFT
SW10
DOWN
SW11
RIGHT
SW12
UP
P12
U1
EMC8P431
X1 4M
P28
P27
VRA
CW
VRB
C1 103P
R4
1K
D3 LED TURBO-A
R3
1K
D4 LED TURBO-B
SW1
TURBO-A
SW2
TURBO-B
GREEN
RED
D1 LED
R2 1K
R1 1K
U2
2.4G RF
SW5
A1 CH1
A2 CH2
A3 CH3
A4 CH4
B1 CH1
B2 CH2
B3 CH3
B4 CH4
Q1
C9014
R6
10k
R7
10k
R5
1k
R10
20K
R11
30K
R8
10K
R9
10K
Q2
C9014
Q3
C9014
SW13
ON
OFF
BATT1
3V
EC2
10UF/16V
TITLE:
MODEL:
NAME: Sam
DATE: 2007/01/15