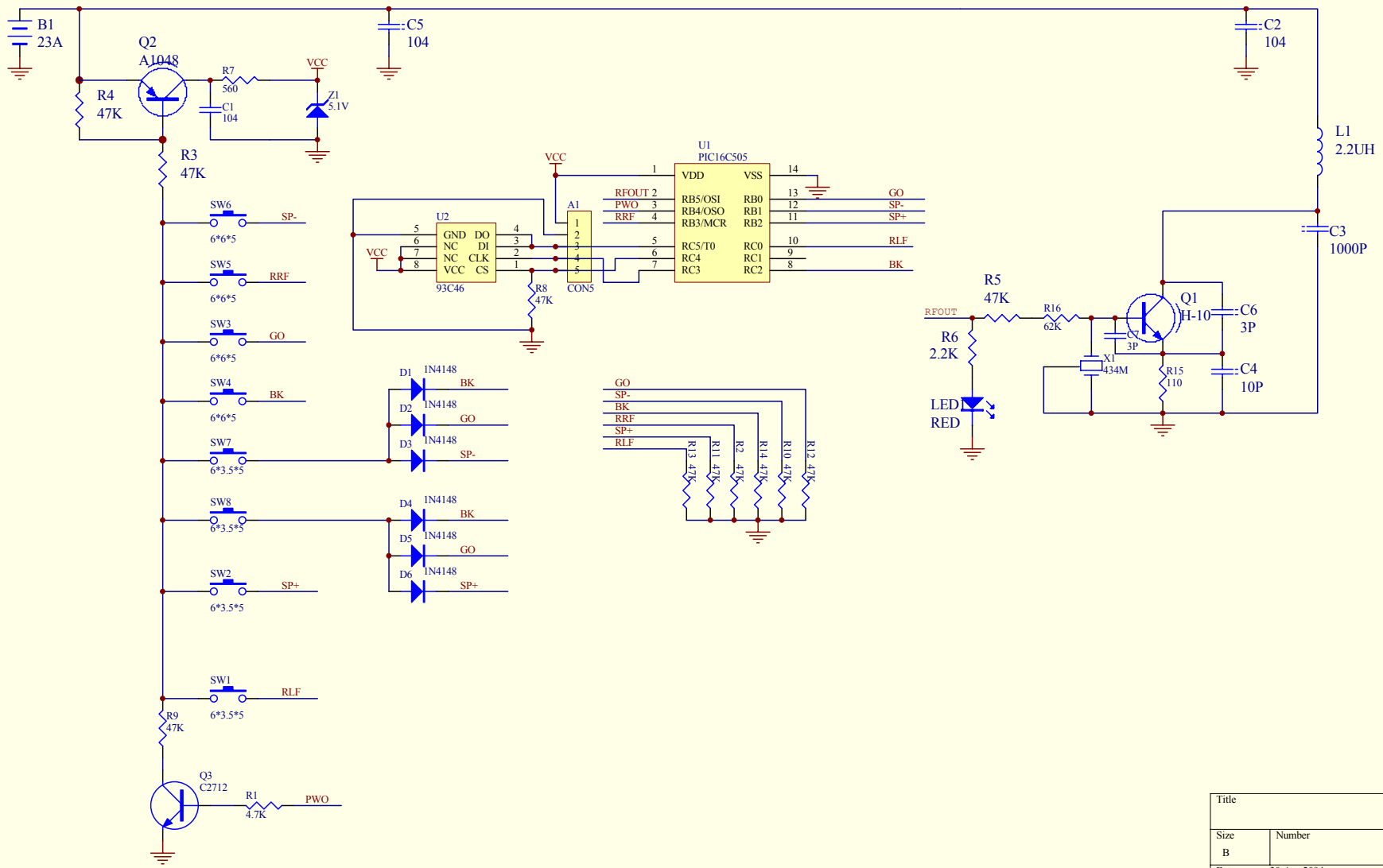

Title		
Size B	Number	Revision
Date: 30-Apr-2004		Sheet of
File: D:\product\TEST1.Ddb		Drawn By:

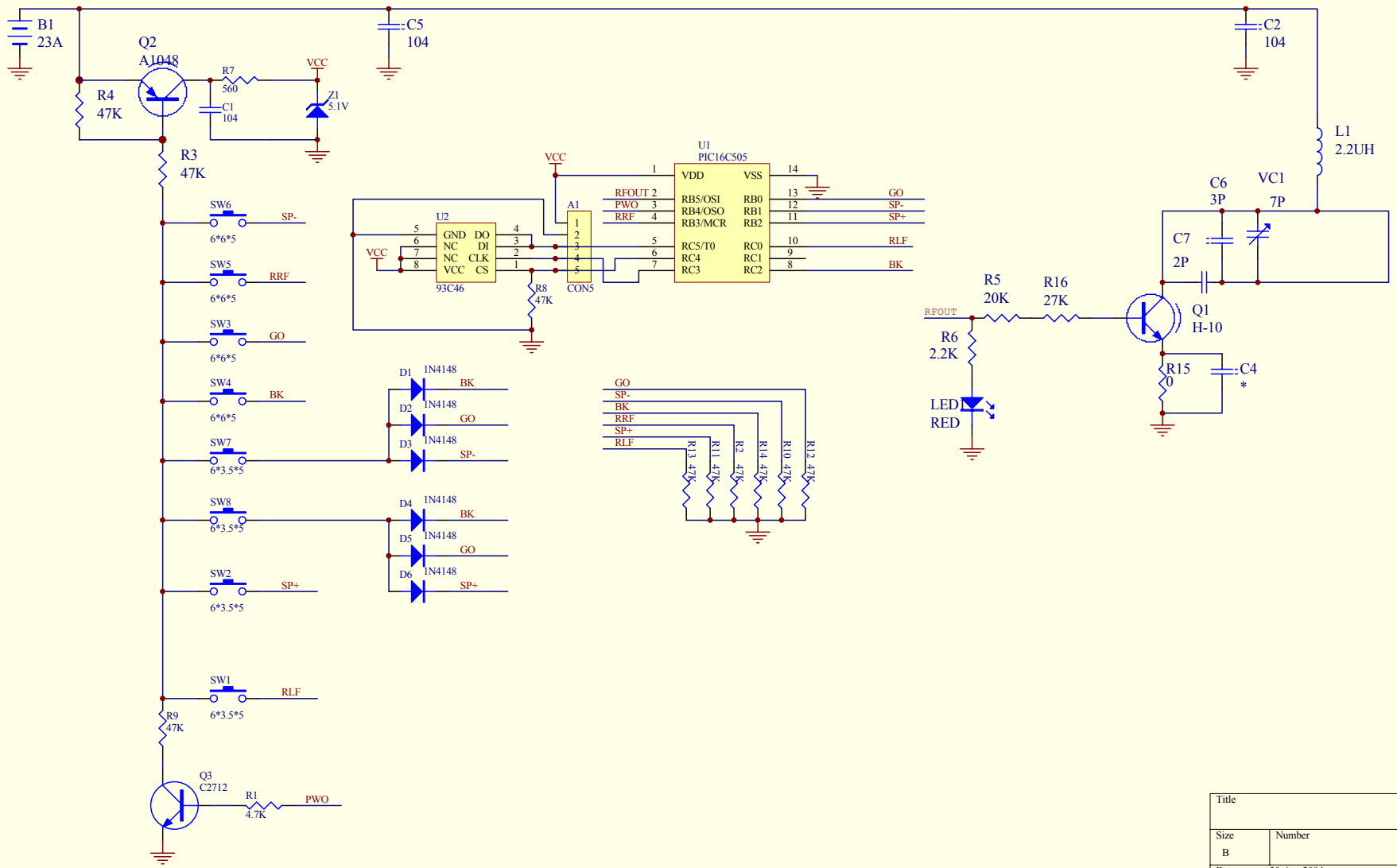

Title		
Size B	Number	Revision
Date: 30-Apr-2004		Sheet of
File: D:\product\TEST1.Ddb		Drawn By: