T E S T R E P O R T
No.: 18-1-0002701T03-C1

According to:
FCC Regulations
Part 15.519

for

Siemens AG

WIRELESS TAG EPAPER 3 PULSE | PHASE

FCC ID: SCF6032704

Laboratory Accreditation
DAkkS Deutsche Akkreditierungsstelle D-PL-12047-01-01 D-PL-12047-01-03 D-PL-12047-01-04
accredited according to DIN EN ISO/IEC 17025

CETECOM GmbH
Laboratory Radio Communications & Electromagnetic Compatibility
Im Teelbruch 116 • 45219 Essen • Germany
Registered in Essen, Germany, Reg. No.: HRB Essen 8984
Tel.: + 49 (0) 20 54 / 95 19-954 • Fax: + 49 (0) 20 54 / 95 19-964
E-mail: info@cetecom.com • Internet: www.cetecom.com

The test results relate only to the individual items which have been tested. This report shall not be reproduced in parts without the written approval of the testing laboratory © Copyright: All rights reserved by CETECOM

Table of contents

1. SUMMARY OF TEST RESULTS ... 3

1.1. Tests measurement overview according of US CFR Title 47, Subpart 15C: ... 3
1.2. Attestation: ... 4

2. ADMINISTRATIVE DATA ... 5

2.1. Identification of the testing laboratory ... 5
2.2. Test location ... 5
2.3. Organizational items ... 5
2.4. Applicant's details ... 5
2.5. Manufacturer's details ... 5

3. EQUIPMENT UNDER TEST (EUT) ... 6

3.1. TECHNICAL DATA OF MAIN EUT DECLARED BY APPLICANT* ... 6
3.2. EUT: Type, S/N etc. and short descriptions used in this test report* ... 6
3.3. Auxiliary Equipment (AE): Type, S/N etc. and short descriptions ... 6
3.4. EUT set-ups ... 7
3.5. EUT operating modes ... 7

4. DESCRIPTION OF TEST SYSTEM SET-UP'S ... 8

4.1. Test system set-up for radiated magnetic field measurements below 30 MHz ... 8
4.2. Test system set-up for radiated electric field measurement 30 MHz to 960MHz ... 9
4.3. Test system set-up for radiated electric field measurement above 960MHz ... 10
4.4. Test system set-up for conducted RF-measurement at antenna port ... 11

5. MEASUREMENTS ... 12

5.1. Transmission time measurement ... 12
5.2. 10 dB bandwidth measurement ... 13
5.3. General Limit - Radiated field strength emissions below 30 MHz ... 14
5.4. General Limit - Radiated field strength emissions, 30 MHz – 960 MHz ... 16
5.5. General Limit – Radiated field strength emissions, above 960 MHz ... 18
5.6. Radiated emissions in the GPS bands ... 20
5.7. Fundamental emission peak power ... 21
5.8. Antenna requirement according to FCC 15.203 ... 21
5.9. **Measurement uncertainties** ... 22

6. ABBREVIATIONS USED IN THIS REPORT ... 23

7. ACCREDITATION DETAILS OF CETECOM'S LABORATORIES AND TEST SITES ... 23

8. INSTRUMENTS AND ANCILLARY ... 24

8.1. **Used equiment "CTC"** ... 24

9. VERSIONS OF TEST REPORTS (CHANGE HISTORY) ... 28

Table of annex

Separate document annex 1: Measurement diagrams

Separate document annex 2: External photographs of EUT

Separate document annex 3: Test set-up photographs

Separate document annex 4: Internal photographs of EUT

The listed attachments are an integral part of this report.

1. Summary of test results

The test results apply exclusively to the test samples as presented in this report. The CETECOM GmbH does not assume responsibility for any conclusions and generalizations taken in conjunction with other specimens or samples of the type of the item presented to tests. Also we refer on special conditions which the applicant should fulfill according §2.927 to §2.948, special focus regarding modification of the equipment and availability of sample equipment for market surveillance tests.
The presented Equipment Under Test (in this report, hereinafter referred as EUT) supports radiofrequency technologies with similar UWB technology and operating frequency range at 3.1 to 4.8 GHz. Other implemented wireless technologies were not considered within this test report.

Following test cases have been performed to show compliance with valid Part 15.209/15.519 of the FCC CFR Title 47 Rules, Edition 4th November 2014.

1.1. Tests measurement overview according of US CFR Title 47, Subpart 15C:

Test cases	Port	References & Limits		EUT set-up	EUT opera-ting mode	Result
		FCC Standard	Test Limit			
TX-Mode						
Transmission time	Antenna terminal (conducted)	§15.519(a1)	-	2*	5*	passed
10 dB bandwidth	Antenna terminal (conducted)	§15.519(b)	3.1 GHz – 10.6 GHz	1*	1, 2, 3, 4, 6*	passed
Radiated emissions	Enclosure + Inter-connecting cables (radiated)	§15.209	Emissions in restricted bands must meet the general field-strength radiated limits	1*	1*	passed
		§15.519(c)		1, 3*	1, 6*	passed
Radiated emissions in the GPS bands	Enclosure + Inter-connecting cables (radiated)	§15.519(d)	-85.3 dBm	1*	1*	passed
Fundamental emission peak power	Enclosure + Inter-connecting cables (radiated)	§15.519(e)	0 dBm for RBW = 50 MHz	1, 3*	1, 6*	passed
Antenna requirement	-	§15.203	-	-	-	passed

* See chapter 3.4 and 3.5

1.2. Attestation:

I declare that all measurements were performed by me or under my supervision and that all measurements have been performed and are correct to my best knowledge and belief to FCC and Industry Canada standards. All requirements as shown in above table are met in accordance with enumerated standards.
The current version of the Test Report 18-1-0002701T03a-C1 replaces the Test Report 18-1-0002701T03a dated 30.07.2018. The replaced Test Report is herewith invalid.

markus.
ridder@cetecom.
com
2019.12.18 10:10:39
+01'00'

.....

Dipl.-Ing. Markus Ridder
Responsible for test section

Digital signiert von: M.Sc. Patrick Marzotko
Name: CN = M.Sc. Patrick Marzotko email = patrick.marzotko@cetecom.com C = DE O = Cetecom GmbH OU = RC/EMC
Datum: 2019.12.18 09:24:54 +01'00'

.....

M.Sc. Patrick Marzotko
Responsible for test report

2. Administrative Data

2.1. Identification of the testing laboratory

Company name:	CETECOM GmbH
Address:	Im Teelbruch 116 45219 Essen - Kettwig Germany
Responsible for testing laboratory:	Volker Wittmann
Deputy:	Dipl.-Ing. Niels Jeß

2.2. Test location

2.2.1. Test laboratory "CTC"

Company name:	see chapter 2.1. Identification of the testing laboratory

2.3. Organizational items

Responsible for test report and project leader:	B.Sc. Piotr Sardyko
Receipt of EUT:	2018-06-08
Date(s) of test:	2018-06-11 to 2018-06-15
Date(s) of test (additional rad. emis. test.):	2019-09-06 – 2019-09-27
Date of report:	2019-12-18

Version of template: 13.02

2.4. Applicant's details

Applicant's name:	Siemens AG
Address:	Gleiwitzer Str. 555 90475 Nürnberg Germany
Contact person:	Dr. Thomas Erik Schilhabel

2.5. Manufacturer's details

Manufacturer's name:	please see Applicant's details
Address:	please see Applicant's details

3. Equipment under test (EUT)

3.1. TECHNICAL DATA OF MAIN EUT DECLARED BY APPLICANT*

Main function	Communication and Real Time Location System		
Device type	Mobile Device		
Frequency range	3100 MHz - 4800 MHz		
Type of modulation	BPSK with BPM		
Number of channels	1 UWB channels		
EMISSION DESIGNATOR(S)	IEEE 802.15.4-2011 UWB		
Antenna Type	☒ Integrated ☐ External, no RF- connector ☐ External, separate RF-connector		
MAX Field strength (radiated):	54 dBµV/m @ 3 m distance and 1 MHz RBW		
Installed options	IEEE 802.15.4 in 2.40 - 2.48 GHz ISM-Band		
Power supply	☒ DC power supply: DC Power 5 V, Battery 3.7 V		
EUT sample type	☒ Production	☐ Pre-Production	☐ Engineering
FCC label attached	☐ yes	☒ no	

*: customer's information

3.2. EUT: Type, S/N etc. and short descriptions used in this test report*

Short descrip-tion	EUT	Type	S/N serial number	HW hardware status	SW software status
EUT A S06	WIRELESS TAG EPAPER 3 PULSE | PHASE (radiated test sample)	6032704	A48307	100010615	2.0.19
EUT B S03	WIRELESS TAG EPAPER 3 PULSE | PHASE (conducted test sample)	6032704	A48306	100010615	2.0.19
EUT C S08	WIRELESS TAG EPAPER 3 PULSE | PHASE (radiated test sample)	6032704	A50503	100010615	2.0.19

*: customer's information

3.3. Auxiliary Equipment (AE): Type, S/N etc. and short descriptions

AE short descrip-tion *)	Auxiliary Equipment	Type	S/N serial number	HW hardware status	SW software status
AE 1 S11	Notebook	Acer Aspire One 722 Notebook	-	-	Windows 10 + TestModes MESH PPP SW V1.0.0
AE 2 S12	Cable with debug interface	1.5 m	-	-	-
AE 3 S16	WIRELESS MESH GATEWAY PULSE | PHASE	6032502	6032502	0583	2.0.8
AE 4 S17	DC Power cable	2 m	-	-	-
AE 5 S18	LAN cable	0.5 m	-	-	-
AE 6 S19	Notebook	Dell Latitude E5470	IT-NB-0039	-	Windows 10 + SW RadioMode Setup Tool v.1.0.0*
AE 7 S09	Debug interface	Circuit board	-	-	-
AE 8 S10	USB cable	1.5 m	-	-	-

*: SW was installed on the customers notebook. Please see photos in Annex 2.

3.4. EUT set-ups

EUT set-up no.*)	Combination of EUT and AE	Remarks
Set. 1	EUT A + AE 1 + AE 2	Radiated RF-setup, AE2 is used temporary for RF-connection
Set. 2	EUT B + AE 1 + AE 3 + AE 4 + AE 5	Conducted RF-setup, transmission time measurement
Set. 3	EUT C + AE 6 + AE 7 + AE 8	Radiated RF-setup, AE7 and AE8 are used temporary for RF-connection. Only for radiated emissions test in frequency range 1610 MHz – 3100 MHz and 10600 MHz – 40000 MHz

*) EUT set-up no. is used to simplify the identification of the EUT set-up in this test report.

3.5. EUT operating modes

EUT operating mode no.*)	Description of operating modes	Additional information
op. 1	TX, channel 2, PRF 16 MHz, datarate 110k, PreambleCode default auf channel 2	Continuous TX-Mode, set-up by special software and with help of PC.
op. 2	TX, channel 2, PRF 64 MHz, datarate 110k, PreambleCode default auf channel 2	Continuous TX-Mode, set-up by special software and with help of PC.
op. 3	TX, channel 2, PRF 16 MHz, datarate 6800k, PreambleCode default auf channel 2	Continuous TX-Mode, set-up by special software and with help of PC.
op. 4	TX, channel 2, PRF 64 MHz, datarate 6800k, PreambleCode default auf channel 2	Continuous TX-Mode, set-up by special software and with help of PC.
op. 5	TX, channel 2, PRF 64 MHz, datarate 6800k, PreambleCode default auf channel 2	For 15.519 (a1), fast TOA Ranging, set-up by Server
op. 6	TX, channel 2, PRF 16 MHz, datarate 110k, PreambleCode default auf channel 2, Pow 3	Only for radiated emissions test in frequency range 1610 MHz – 3100 MHz and 10600 MHz – 40000 MHz. Retesting according to FCC 15.519.

*) EUT operating mode no. is used to simplify the test report.

4. Description of test system set-up's

4.1. Test system set-up for radiated magnetic field measurements below 30 MHz

Specification: ANSI C63.4-2014 §5.3, §8.2.1, §8.3.1.1+§8.3.2.1 , ANSI C63.10-2013 chapter 6.4 (§6.4.4.2)

General Description: Evaluating the radiated field emissions are done first by an exploratory emission measurement and a final measurement for most critical frequencies determined.

The loop antenna was placed at 1 m height above ground plane and 3 m measurement distance from set-up for investigations. Because of reduced measurement distance, correction data were applied, as stated in chapter "General Limit - Radiated field strength emissions below 30 MHz". The tests are performed in the semi anechoic room recognized by the regulatory commission.

Schematic:

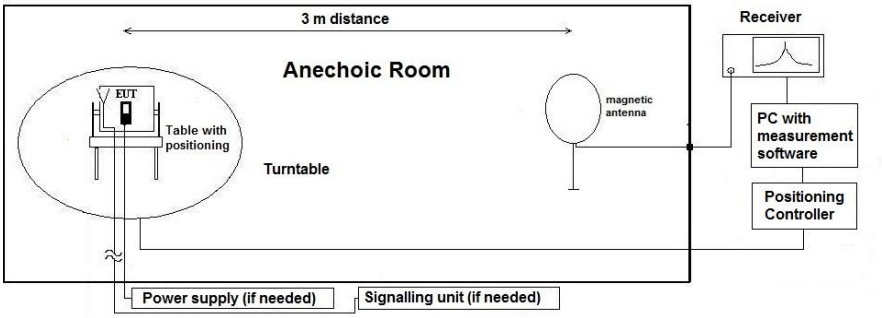

Testing method:

Exploratory, preliminary measurement
The EUT and its associated accessories are placed on a non-conductive position manipulator (tipping device) of 0.8 m height which is placed on the turntable. By rotating the turntable (step 90°, range 0°to 360°) and the EUT itself either on 3-orthogonal axis (portable equipment) or 2-orthogonal axis (defined operational position of EUT), the emission spectrum was recorded. The loop antenna was moved at least to 2-perpendicular axes (antenna vector in direction of EUT and parallel to EUT) in order to maximize the emissions. The results are documented in a diagram. Critical frequencies (low margin to limit) are saved within a data reduction table for further investigations. If various operating modes are supported, further investigations are made to find the worst-case. Also the interconnection cables and equipment position were varied in order to maximize the emissions.

Final measurement on critical frequencies
Based on the exploratory measurements, the most critical frequencies are re-measured by maintaining the EUT's worst-case operation mode, cable position, etc.

First a frequency zoom around the critical frequency is done to locate the frequency more precisely. After this step, for all identified critical frequencies, the maximum peak was determined.

Following parameters were varied: the turntable angle continuously in the range 0 to 360 degree, the EUT itself either over 3-orthogonal axis (not defined usage position) or 2-orthogonal axis (defined usage position).

On the determined worst-case position, a final measurement with necessary bandwidth and detector according standard has been carried out.

Formula:

$E_C = E_R + AF + C_L + D_F - G_A$

$M = L_T - E_C$

AF =Antenna factor
C_L = Cable loss
D_F= Distance correction factor
E_C = Electrical field – corrected value
E_R = Receiver reading
G_A= Gain of pre-amplifier (if used)
L_T = Limit
M = Margin

All units are dB-units, positive margin means value is below limit.

Distance correction: Reference for applied correction (extrapolating) factors due to reduced measurement distance:
ANSI C63.10:2013, §6.4.4.2 - Equations (2) + (3) + (4)

4.2. Test system set-up for radiated electric field measurement 30 MHz to 960MHz

Specification: ANSI C63.4-2014 chapter 8.2.3, ANSI C63.10-2013 chapter 6.5

General Description: Evaluating the field emissions have to be done first by an exploratory emissions measurement and a final measurement for most critical frequencies. The tests are performed in a NSA-compliant semi anechoic room (SAR) recognized by the regulatory commissions.

Schematic:

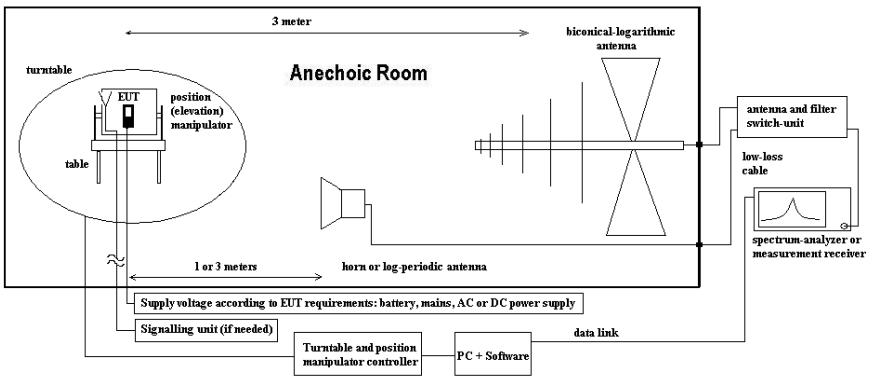

Testing method:

Exploratory, preliminary measurements
The EUT and its associated accessories are placed on a non-conductive position manipulator (tipping device) of 0.8 m height which is placed on the turntable. By rotating the turntable (range 0° to 360°, step 90°) and the EUT itself either on 3-orthogonal axis (portable equipment) or 2-orthogonal axis (defined operational position of EUT) the emission spectrum and it's characteristics was recorded with an EMI-receiver, broadband antenna and software.

Measurement antenna: horizontal and vertical, heights: 1.0 m and 1.82 m as worst-case determined by an exploratory emission measurements. The results are documented in a diagram. Critical frequencies (low margin to limit) are saved within a table for further investigations. If various operating modes are supported, further investigations are made to find the worst-case of them. Also the interconnection cables and equipment position were varied in order to maximize the emissions.

Final measurement on critical frequencies
Based on the exploratory measurements, the most critical frequencies are re-measured by maintaining the EUT's worst-case operation mode, cable position, etc. either on 10m OATS or 3m semi-anechoic room.

First a frequency zoom around the critical frequency is done to locate the frequency more precisely. After this step, for all identified critical frequencies, the maximum peak was determined.

Following parameters were varied: the turntable angle continuously in the range 0 to 360 degree, the EUT itself either over 3-orthogonal axis (not defined usage position) or 2-orthogonal axis (defined usage position). The measurement antenna height between 1 m and 4 m.

On the determined worst-case position, a final measurement with necessary bandwidth and detector according standard has been carried out.

Formula:

$E_C = E_R + AF + C_L + D_F - G_A$ (1)

$M = L_T - E_C$ (2)

AF = Antenna factor
C_L = Cable loss
D_F = Distance correction factor (if used)
E_C = Electrical field – corrected value
E_R = Receiver reading
G_A = Gain of pre-amplifier (if used)
L_T = Limit
M = Margin

All units are dB-units, positive margin means value is below limit.

4.3. Test system set-up for radiated electric field measurement above 960MHz

Specification: ANSI C63.10-2013, chapter 10.3

General Description: The tests are performed in a CISPR 16-1-4:2010 compliant fully anechoic room (FAR) recognized by the regulatory commission. The measurement distance was set to 1 m or 3 m. A logarithmic periodic antenna is used for the frequency range 30 MHz to 1 GHz. Horn antennas are used for frequency range 1 GHz to 40 GHz. The EUT is aligned within 3 dB beam width of the measurement antenna with three orthogonal axis measurements on the EUT.

Schematic:

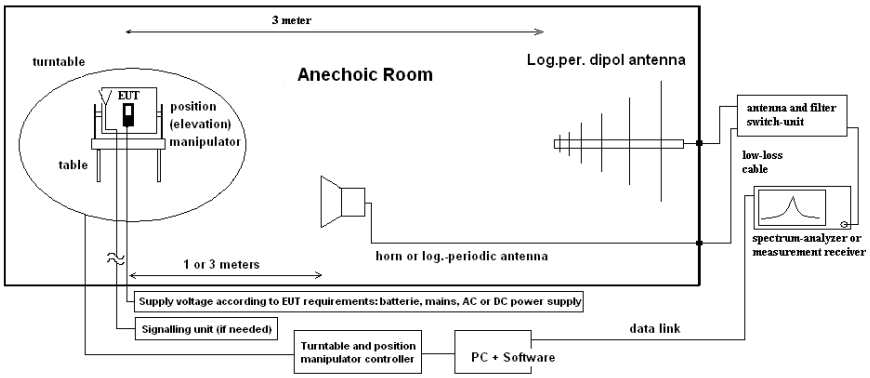

Testing method:

Exploratory, preliminary measurements
The EUT and its associated accessories are placed on a non-conductive position manipulator (tipping device) of 1.55 m height which is placed on the turntable. By rotating the turntable (range 0° to 360°, step 15°) and the EUT itself either on 3-orthogonal axis (portable equipment) or 2-orthogonal axis (defined operational position of EUT) the emission spectrum and it's characteristics was recorded with an EMI-receiver, broadband antenna and software.
The measurements are performed in horizontal and vertical polarization of the measurement antennas. The results are documented in a diagram. Critical frequencies (low margin to limit) are saved within a table for further investigations. If various operating modes are supported, further investigations are made to find the worst-case of them. Also the interconnection cables and equipment position were varied in order to maximize the emissions.

Formula:

$E_C = E_R + AF + C_L + D_F - G_A$ (1)

$M = L_T - E_C$ (2)

E_C = Electrical field – corrected value
E_R = Receiver reading
M = Margin
L_T = Limit
AF = Antenna factor
C_L = Cable loss
D_F = Distance correction factor (if used)
G_A = Gain of pre-amplifier (if used)

All units are dB-units, positive margin means value is below limit.

4.4. Test system set-up for conducted RF-measurement at antenna port

Specification: ANSI C63.13-2013

General Description: In order to avoid overload, the EUT's RF-signal is first attenuated before it is connected to the spectrum – analyzer/ power meter. The specific attenuation is determined prior to the measurement within a set-up calibration. The power measurement is done either with a suitable power meter or a spectrum analyzer. The value is taken into account by correcting the measurement readings on the spectrum-analyzer either by a transducer factor (TDF) or an relative offset to reference level.

Schematic:

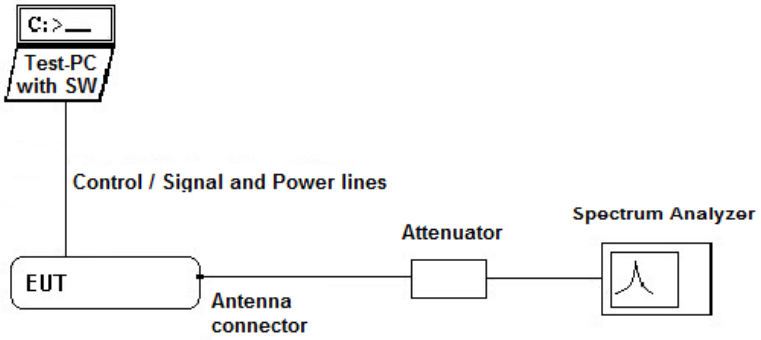

5. Measurements

5.1. Transmission time measurement

5.1.1. Test location and equipment

Ref.-No.	Equipment	Type	Serial-No.
Conducted measurement			
732	Spectrum Analyzer	R&S FSW67	104023
497	Power supply	Voltcraft 2256	-
134	Antenna	EMCO 3115	9005-3414
829	Directional Coupler	ET Industries C-0520-10	511

5.1.2. Reference

FCC	See chapter 1.1.

5.1.3. EUT settings:

The EUT is switched on.

5.1.4. Test condition and measurement test set-up

EUT-grounding	☒ none	☐ with power supply	☐ additional connection
Equipment set up	☒ table top 1.5 m height		☐ floor standing
Climatic conditions	Temperature: (22±3° C)		Rel. humidity: (40±20)% rH

5.1.5. Measurement method and analyzer settings:

The measurement is made conducted. Directional coupler is used in this measurement. RF Signal from the intentional radiator comes through the antenna and RF cable to coupled port and then to input port and to the EUT. Thereby receiver remains active for the duration of the test. RF Signal of the EUT is routed to input port and further to the transmitter port and to the spectrum analyzer.

The measurement is made in time domain by the central frequency of the channel. Measurement duration 60 s. RBW = 1 MHz.

The EUT transmits only when the intentional radiator is on and the EUT is moved.

The first measurement is made without turning on intentional radiator. The EUT is moved after 30 s. It will be checked, that the EUT doesn't transmit.

Before the second measurement an intentional radiator is switched on. Then the measurement is started by the spectrum analyzer. The EUT is moved after 30 s. It is checked, whether the EUT transmits, when the intentional radiator is switched on and how long.

5.1.6. RESULTS

The EUT stops to transmit approximately 4 s after it is moved, when the intentional radiator is on. When the intentional radiator is off, the EUT doesn't transmit.

5.1.6.1. VERDICT: PASS. For graphical results pls. see annex 1 to this test report.

5.2. 10 dB bandwidth measurement

5.2.1. Test location and equipment

Ref.-No.	Equipment	Type	Serial-No.
732	Spectrum Analyzer	R&S FSW67	104023
497	Power supply	Voltcraft 2256	-
133	Antenna	EMCO 3115	9012-3629
812	1-18 GHz Amplifier	Wright Technologies ASG18B-4010	0001

5.2.2. Reference

FCC	See chapter 1.1.

5.2.3. Test condition and measurement test set-up

EUT-grounding	☒ none	☐ with power supply	☐ additional connection
Equipment set up	☒ table top		☐ floor standing
Climatic conditions	Temperature: (22±3° C)		Rel. humidity: (40±20)% rH
General measurement procedures	Please see chapter "Test system set-up for conducted RF-measurement at antenna Port" (W2 Set-up)		

5.2.4. EUT Settings:

The measurement is made radiated. The EUT was instructed to transmit continuously with maximum power (if adjustable) according applicants declared and applicable settings.
Different characteristics have been checked, e.g. data rates which EUT can operate if applicable.

5.2.5. Measurement method:

The frequency at which the maximum power level is measured with the peak detector is designated f_M (RBW=1 MHz, VBW= 3 MHz, peak detection, maxhold). The outermost 1 MHz segments above and below f_M, where the peak power falls by 10 dB relative to the level at f_M, are designated as f_H and f_L. The UWB transmission, and the -10 dB bandwidth (B - 10), is defined as (f_H - f_L). -10 dB bandwidth should be ≥500 MHz and must be contained between 3100 MHz and 10.600 MHz.

5.2.6. Spectrum-Analyzer settings:

Span	1.5 GHz
Resolution Bandwidth (RBW)	ANSI 63.10-2013, chapter 10.1
Video Bandwidth (VBW)	Minimum 3 times the resolution bandwidth
Sweep time	Auto-coupled
Detector	Peak detector
Sweep mode	Repetitive Mode, MAX-HOLD, trace stabilization

5.2.7. Results:

Op. Mode:	The frequency with the maximum power f_M, [MHz]	Power at the frequency f_M, [dBm]	Lowest frequency bound f_L, [MHz]	Highest frequency bound f_H, [MHz]	-10 dB bandwidth, [MHz]
1	3803.3	-25.51	3648.8	4198.9	550.1
2	3744.8	-37.95	3642.8	4144.9	502.1
3	3993.6	-28.32	3648.8	4203.4	554.6
4	3789.8	-37.19	3630.8	4198.9	568.1
6	3993.6	-25.09	3682.8	4208.5	525.7

Remark: For graphical results pls. see annex 1 to this test report.
The operation mode No 1 shows the highest power value. This mode will be used furthermore for other measurements. Mode 6 was used only for radiated emissions test in frequency range 1610 MHz – 3100 MHz and 10600 MHz – 40000 MHz (retesting according to FCC 15.519). 10 dB bandwidth measurement was made for mode 6 only to check whether the EUT for retesting has the same power and 10 dB BW as the primary EUT. As it can be seen from the table above both EUTs have approximately the same power and the same 10 dB BW.

VERDICT: PASS

5.3. General Limit - Radiated field strength emissions below 30 MHz

5.3.1. Test location and equipment

test location	☒ CETECOM Essen (Chapter. 2.2.1)		☐ Please see Chapter. 2.2.2		☐ Please see Chapter. 2.2.3	
test site	☒ 441 EMI SAR	☐ 487 SAR NSA	☐ 347 Radio.lab.		☐	☐
receiver	☐ 377 ESCS30	☒ 001 ESS	☐	☐	☐	☐
spectr. analyz.	☐ 584 FSU	☐ 120 FSEM	☐ 264 FSEK	☐	☐	☐
antenna	☐ 574 BTA-L	☐ 133 EMCO3115	☐ 302 BBHA9170	☐ 289 CBL 6141	☐ 030 HFH-Z2	☒ 021 EMCO6502
signaling	☐ 757 CMW500	☐ 371 CBT32	☐ 547 CMU	☐ 594 CMW500		
otherwise	☐ 400 FTC40x15E	☐ 401 FTC40x15E	☐ 110 USB LWL	☐ 482 Filter Matrix	☐ 378 RadiSense	
DC power	☐ 456 EA 3013A	☐ 457 EA 3013A	☐ 459 EA 2032-50	☐ 268 EA- 3050	☐ 494 AG6632A	☐ 498 NGPE 40
line voltage	☐ 230 V 50 Hz via public mains		☐ 060 120 V 60 Hz via PAS 5000			

5.3.2. Requirements

FCC	See chapter 1.1.			
ANSI	C63.10-2013			
Frequency [MHz]	Field strength limit [µV/m]	[dBµV/m]	Distance [m]	Remarks
0.009 – 0.490	2400/f (kHz)	67.6 – 20Log(f) (kHz)	300	Correction factor used due to measurement distance of 3 m
0.490 – 1.705	24000/f (kHz)	87.6 – 20Log(f) (kHz)	30	Correction factor used due to measurement distance of 3 m
1.705 – 30	30	29.5	30	Correction factor used due to measurement distance of 3 m

5.3.3. Test condition and test set-up

EUT-grounding		☒ none	☐ with power supply	☐ additional connection
Equipment set up		☒ table top		☐ floor standing
Climatic conditions		Temperature: (22±3° C)		Rel. humidity: (40±20)% rH
EMI-Receiver or Analyzer Settings	Scan data	☒ 9 – 150 kHz RBW/VBW = 200 Hz Scan step = 80 Hz ☒ 150 kHz – 30 MHz RBW/VBW = 9 kHz Scan step = 4 kHz ☐ other:		
	Scan-Mode Detector Mode: Sweep-Time	☒ 6 dB EMI-Receiver Mode ☐ 3dB Spectrum analyzer Mode Peak (pre-measurement) and Quasi-PK/Average (final if applicable) Repetitive-Scan, max-hold Coupled – calibrated display if continuous signal otherwise adapted to EUT's individual transmission duty-cycle		
General measurement procedures		Please see chapter "Test system set-up radiated magnetic field measurements below 30 MHz"		

5.3.4. Measurement Results

The results are presented below in summary form only. For more information please consult the diagrams included in annex 1.

Measurement No	Frequency range	Ch. No	OP-mode no.	Remark	Detector	Result
1	9 kHz-30 MHz	2	1	Op. mode- worst case. Laying position, 5 V DC power supply	Peak	passed
2	9 kHz-30 MHz	2	1	Op. mode- worst case. Standing position, 5 V DC power supply	Peak	passed

5.3.5. Correction factors due to reduced meas. distance (f< 30 MHz)

The used correction factors when the measurement distance is reduced compared to regulatory measurement distance, are calculated according Extrapolation formulas valid for EUT's with maximum dimension of 0.625xLambda. Formula 2+3+4 as presented in ANSI C63.10, Chapter 6.4.4 are used for the calculations of proper extrapolation factors.

Frequency -Range	f [kHz/MHz]	Lambda [m]	Far-Field Point [m]	Distance Limit accord. 15.209 [m]	1st Condition (dmeas< $D_{near-field}$)	2'te Condition (Limit distance bigger $d_{near-field}$)	Distance Correction accord. Formula
kHz	9,00E+03	33333,33	5305,17	300	fullfilled	not fullfilled	-80,00
	1,00E+04	30000,00	4774,65		fullfilled	not fullfilled	-80,00
	2,00E+04	15000,00	2387,33		fullfilled	not fullfilled	-80,00
	3,00E+04	10000,00	1591,55		fullfilled	not fullfilled	-80,00
	4,00E+04	7500,00	1193,66		fullfilled	not fullfilled	-80,00
	5,00E+04	6000,00	954,93		fullfilled	not fullfilled	-80,00
	6,00E+04	5000,00	795,78		fullfilled	not fullfilled	-80,00
	7,00E+04	4285,71	682,09		fullfilled	not fullfilled	-80,00
	8,00E+04	3750,00	596,83		fullfilled	not fullfilled	-80,00
	9,00E+04	3333,33	530,52		fullfilled	not fullfilled	-80,00
	1,00E+05	3000,00	477,47		fullfilled	not fullfilled	-80,00
	1,25E+05	2400,00	381,97		fullfilled	not fullfilled	-80,00
	2,00E+05	1500,00	238,73		fullfilled	fullfilled	-78,02
	3,00E+05	1000,00	159,16		fullfilled	fullfilled	-74,49
	4,00E+05	750,00	119,37		fullfilled	fullfilled	-72,00
	4,90E+05	612,24	97,44		fullfilled	fullfilled	-70,23
	5,00E+05	600,00	95,49	30	fullfilled	not fullfilled	-40,00
	6,00E+05	500,00	79,58		fullfilled	not fullfilled	-40,00
	7,00E+05	428,57	68,21		fullfilled	not fullfilled	-40,00
	8,00E+05	375,00	59,68		fullfilled	not fullfilled	-40,00
	9,00E+05	333,33	53,05		fullfilled	not fullfilled	-40,00
MHz	1,00	300,00	47,75		fullfilled	not fullfilled	-40,00
	1,59	188,50	30,00		fullfilled	not fullfilled	-40,00
	2,00	150,00	23,87		fullfilled	fullfilled	-38,02
	3,00	100,00	15,92		fullfilled	fullfilled	-34,49
	4,00	75,00	11,94		fullfilled	fullfilled	-32,00
	5,00	60,00	9,55		fullfilled	fullfilled	-30,06
	6,00	50,00	7,96		fullfilled	fullfilled	-28,47
	7,00	42,86	6,82		fullfilled	fullfilled	-27,13
	8,00	37,50	5,97		fullfilled	fullfilled	-25,97
	9,00	33,33	5,31		fullfilled	fullfilled	-24,95
	10,00	30,00	4,77		fullfilled	fullfilled	-24,04
	10,60	28,30	4,50		fullfilled	fullfilled	-23,53
	11,00	27,27	4,34		fullfilled	fullfilled	-23,21
	12,00	25,00	3,98		fullfilled	fullfilled	-22,45
	13,56	22,12	3,52		fullfilled	fullfilled	-21,39
	15,00	20,00	3,18		fullfilled	fullfilled	-20,51
	15,92	18,85	3,00		fullfilled	fullfilled	-20,00
	17,00	17,65	2,81		not fullfilled	fullfilled	-20,00
	18,00	16,67	2,65		not fullfilled	fullfilled	-20,00
	20,00	15,00	2,39		not fullfilled	fullfilled	-20,00
	21,00	14,29	2,27		not fullfilled	fullfilled	-20,00
	23,00	13,04	2,08		not fullfilled	fullfilled	-20,00
	25,00	12,00	1,91		not fullfilled	fullfilled	-20,00
	27,00	11,11	1,77		not fullfilled	fullfilled	-20,00
	29,00	10,34	1,65		not fullfilled	fullfilled	-20,00
	30,00	10,00	1,59		not fullfilled	fullfilled	-20,00

5.4. General Limit - Radiated field strength emissions, 30 MHz – 960 MHz

5.4.1. Test location and equipment

test location	☒ CETECOM Essen (Chapter. 2.2.1)		☐ Please see Chapter. 2.2.2		☐ Please see Chapter. 2.2.3	
test site	☒ 441 EMI SAR	☒ 487 SAR NSA				
receiver	☐ 377 ESCS30	☒ 001 ESS	☐ 489 ESU 40	☐ 620 ESU 26		
spectr. analyz.	☐ 584 FSU	☐ 120 FSEM	☐ 264 FSEK			
antenna	☒ 574 BTA-L	☐ 133 EMCO3115	☐ 302 BBHA9170	☐ 289 CBL 6141	☐ 030 HFH-Z2	☐ 477 GPS
signaling	☐ 392 MT8820A	☐ 371 CBT32	☐ 547 CMU	☐ 594 CMW		
otherwise	☐ 400 FTC40x15E	☐ 401 FTC40x15E	☐ 110 USB LWL	☒ 482 Filter Matrix		
DC power	☐ 456 EA 3013A	☐ 457 EA 3013A	☐ 459 EA 2032-50	☐ 268 EA- 3050	☐ 494 AG6632A	☐ 498 NGPE
line voltage	☐ 230 V 50 Hz via public mains		☐ 060 120 V 60 Hz via PAS 5000			

5.4.2. Requirements/Limits

FCC		See chapter 1.1.	
ANSI		☐ C63.4-2014 ☒ C63.10-2013	
Limit	Frequency [MHz]	Radiated emissions limits, 3 meters	
		QUASI Peak [µV/m]	QUASI-Peak [dBµV/m]
	30 - 88	100	40.0
	88 - 216	150	43.5
	216 - 960	200	46.0
	above 960	500	54.0

5.4.3. Restricted bands of operation (FCC §15.205/ RSS-Gen, Issue 4 Chapter 8.9, Table 4)

MHz	MHz	MHz	GHz
0.090-0.110	16.42-16.423	399.9-410	4.5-5.15
0.495-0.505	16.69475-16.69525	608-614	5.35-5.46
2.1735-2.1905	16.80425-16.80475	960-1240	7.25-7.75
4.125-4.128	25.5-25.67	1300-1427	8.025-8.5
4.20725-4.20775	37.5-38.25	1645.5-1646.5	9.3-9.5
6.215-6.218	73-74.6	1660-1710	10.6-12.7
6.26775-6.26825	74.8-75.2	1718.8-1722.2	13.25-13.4
6.31175-6.31225	108-121.94	2200-2300	14.47-14.5
8.291-8.294	123-138	2310-2390	15.35-16.2
8.362-8.366	149.9-150.05	2483.5-2500	17.7-21.4
8.37625-8.38675	156.52475-156.52525	2690-2900	22.01-23.12
8.41425-8.41475	156.7-156.9	3260-3267	23.6-24.0
12.29-12.293	162.0125-167.17	3332-3339	31.2-31.8
12.51975-12.52025	167.72-173.2	3345.8-3358	36.43-36.5
12.57675-12.57725	240-285	3600-4400	--
13.36-13.41	322-335.4	--	--
Remark: only spurious emissions are allowed within these frequency bands not exceeding the limits per §15.209			

5.4.4. Test condition and measurement test set-up

EUT-grounding		☒ none	☐ with power supply	☐ additional connection
Equipment set up		☒ table top 0.8 m height		☐ floor standing
Climatic conditions		Temperature: (22±3° C)		Rel. humidity: (40±20)% rH
EMI-Receiver (Analyzer) Settings	Scan frequency range:	☒ 30 – 1000 MHz ☐ other:		
	Scan-Mode	☒ 6 dB EMI-Receiver Mode ☐ 3 dB spectrum analyzer mode		
	Detector	Peak / Quasi-peak		
	RBW/VBW	100 kHz/300 kHz		
	Mode:	Repetitive-Scan, max-hold		
	Scan step	80 kHz		
	Sweep-Time	Coupled – calibrated display if continuous tx-signal otherwise adapted to EUT's individual duty-cycle		
General measurement procedures		Please see chapter "Test system set-up for electric field measurement in the range 30 MHz to 1 GHz"		

5.4.5. MEASUREMENT RESULTS

The results are presented below in summary form only. For more information please consult the diagrams included in annex 1.

Measurement No	Frequency range	Ch. No	OP-mode no.	Remark	Detector	Result
1	30 MHz - 960 MHz	2	1	Op. mode- worst case. Laying position, 5 V DC power supply	Peak	passed
2	30 MHz - 960 MHz	2	1	Op. mode- worst case. Standing position, 5 V DC power supply	Peak	passed

5.5. General Limit – Radiated field strength emissions, above 960 MHz

5.5.1. Test location and equipment

Ref.-No.	Equipment	Type	Serial-No.
Frequency range 960 MHz – 1610 MHz, EUT A			
Measurement in FAR 1 with the distance between the EUT and the antenna 1.4 m			
732	Spectrum Analyzer	R&S FSW67	104023
497	Power supply	Voltcraft 2256	-
549	Antenna	HL025	1000060
338	RF Amplifier	Miteq JS4-00102600-38-5P	838697
Frequency range 1610 MHz – 3100 MHz, EUT C			
Measurement in FAR 1 with the distance between the EUT and the antenna 1.4 m			
732	Spectrum Analyzer	R&S FSW67	104023
020	Antenna	R&S HL025	1000060
-	RF Amplifier	Narda-Miteq AMF-4D-00100800-18-13P	2079842
Frequency range 3100 MHz – 10600 MHz, EUT A			
Measurement in FAR 1 with the distance between the EUT and the antenna 3 m			
732	Spectrum Analyzer	R&S FSW67	104023
497	Power supply	Voltcraft 2256	-
549	Antenna	HL025	1000060
338	RF Amplifier	Miteq JS4-00102600-38-5P	838697
Frequency range 10600 MHz – 12400 MHz, EUT C			
Measurement in FAR 2 with the distance between the EUT and the antenna 3 m			
732	Spectrum Analyzer	R&S FSW67	104023
133	Antenna	EMCO 3115	9012-3629
338	RF Amplifier	Narda Miteq JS42-08001800-16-8P	2079990
Frequency range 12400 MHz – 18000 MHz, EUT C			
Measurement in FAR 2 with the distance between the EUT and the antenna 2 m			
732	Spectrum Analyzer	R&S FSW67	104023
811	Antenna	ASY-SGH-124-SMA	29F14182337
338	RF Amplifier	Narda Miteq JS42-08001800-16-8P	2079990
Frequency range 18000 MHz – 40000 MHZ, EUT C			
Measurement in FAR 2 with the distance between the EUT and the antenna 1.5 m			
732	Spectrum Analyzer	R&S FSW67	104023
302	Antenna	BBHA9170	155
688	RF Amplifier	Miteq JS-18004000-40-8P	1750117

5.5.2. Requirements/Limits

FCC	See chapter 1.1.
ANSI	☐ C63.4-2014 ☒ C63.10-2013
Frequency [MHz]	Limits, EIRP in dBm
960-1610	−75.3
1610-1990	−63.3
1990-3100	−61.3
3100-10600	−41.3
10600- 40000	−61.3

5.5.3. Measurement method:

Measurement method is described in general in chapter 4.4.

The measurements in this chapter were primary made for FCC 15.517. Later the EUT was retested for FCC 15.519. Only the tests were repeated, where the limits differ from the limits for FCC 15.517. For this purpose an identical EUT was used (EUT C, see chapter 3.2).

5.5.4. Test condition and measurement test set-up

EUT-grounding		☒ none ☐ with power supply	☐ additional connection
Equipment set up		☒ table top 1.5 m height	☐ floor standing
Climatic conditions		Temperature: (22±3° C)	Rel. humidity: (40±20)% rH
Spectrum-Analyzer settings	Scan frequency range: Scan-Mode Detector RBW/VBW Mode: Sweep-Time	☒ 1 – 18 GHz ☐ 18 – 25 GHz ☐ 18 – 40 GHz ☐ other: ☐ 6 dB EMI-Receiver Mode ☒ 3 dB Spectrum analyzer Mode RMS 1 MHz / 3 MHz Repetitive-Scan, max-hold ≤ 1 ms over each measurement bin	
General measurement procedures		Please see chapter “Test system set-up for radiated electric field measurements above 1 GHz”	

5.5.5. Measurement Results

The results are presented below in summary form only. For more information please consult the diagrams included in annex 1.

Measurement No	Frequency range	OP-mode no.	Remark	Detector	Result
1	960 MHz – 1610 MHz	1	Op. mode- worst case. 5 V DC power supply	RMS	passed
2	1610 MHz – 3100 MHz	6	Op. mode- worst case. Battery 3.7 V	RMS	passed
3	3100 MHz – 5000 MHz	1	Op. mode- worst case. 5 V DC power supply	RMS	passed
4	f_c=3993.6 MHz, BW=600MHz	1	RBW = 1 MHz. VBW= 3 MHz. SWT = 600 ms. MaxHold. Auto Sweep. 5 V DC power supply	RMS	Passed
5*	f_c=3993.6 MHz, BW=600MHz	6	RBW = 1 MHz. VBW= 3 MHz. SWT = 600 ms. MaxHold. Auto Sweep. Battery 3.7 V	RMS	Passed
6	5000 MHz – 10600 MHz	1	Op. mode- worst case. 5 V DC power supply	RMS	passed
7	10600 MHz – 12400 MHz	6	Op. mode- worst case. Battery 3.7 V	RMS	passed
8	12400 MHz – 18000 MHz	6	Op. mode- worst case. Battery 3.7 V	RMS	passed
9	18000 MHz – 40000 MHz	6	Op. mode- worst case. Battery 3.7 V	RMS	passed

Remark : see diagrams in annex 1 for more details.

* Mode 6 was used only for radiated emissions test in frequency range 1610 MHz – 3100 MHz and 10600 MHz – 40000 MHz (retesting according to FCC 15.519). Measurement No 5 was made for mode 6 only to check whether the radiated power of the UWB signal of the second EUT is not higher as the specified limit. Radiated emissions for mode 6 at the frequency of the channel 2 exceeded the limit (delta < 3dB). Thus the applicant should reduce the power of this mode by 3 dB. See Mode 6 in subsection 3.5.

5.6. Radiated emissions in the GPS bands

5.6.1. Test location and equipment

Ref.-No.	Equipment	Type	Serial-No.
Measurement in FAR 2 with the distance between the EUT and the antenna 3 m			
732	Spectrum Analyzer	R&S FSW67	104023
497	Power supply	Voltcraft 2256	-
133	Antenna	EMCO 3115	9012-3629
812	1-18 GHz Amplifier	Wright Technologies ASG18B-4010	0001

5.6.2. Requirements/Limits

FCC	See chapter 1.1.
ANSI	☐ C63.4-2014 ☒ C63.10-2013
Frequency [MHz]	Limits, EIRP in dBm
1164-1240	-85.3
1559-1610	-85.3

5.6.3. Test condition and measurement test set-up

EUT-grounding		☒ none ☐ with power supply	☐ additional connection
Equipment set up		☒ table top 1.5 m height	☐ floor standing
Climatic conditions		Temperature: (22±3° C)	Rel. humidity: (40±20)% rH
Spectrum-Analyzer settings	Scan-Mode Detector RBW/VBW Mode: Sweep-Time	☐ 6 dB EMI-Receiver Mode ☒ 3 dB Spectrum analyzer Mode RMS 1 kHz / 3 kHz Repetitive-Scan, max-hold ≤ 1 ms over each measurement bin	
General measurement procedures		Please see chapter “Test system set-up for radiated electric field measurements above 1 GHz”	

5.6.4. Measurement Results

The results are presented below in summary form only. For more information please consult the diagrams included in annex 1.

Measurement No	Frequency range	Ch. No	OP-mode no.	Remark	Detector	Result
1	1164-1240	2	1	Op. mode- worst case. 5 V DC power supply	RMS	passed
2	1559-1610	2	1	Op. mode- worst case. 5 V DC power supply	RMS	passed

Remark : see diagrams in annex 1 for more details.

5.7. Fundamental emission peak power

5.7.1. Test location and equipment FAR

Ref.-No.	Equipment	Type	Serial-No.
Measurement in FAR 2 with the distance between the EUT and the antenna 3 m, EUT A			
732	Spectrum Analyzer	R&S FSW67	104023
497	Power supply	Voltcraft 2256	-
133	Antenna	EMCO 3115	9012-3629
812	1-18 GHz Amplifier	Wright Technologies ASG18B-4010	0001
Measurement in FAR 2 with the distance between the EUT and the antenna 3 m, EUT B			
732	Spectrum Analyzer	R&S FSW67	104023
133	Antenna	EMCO 3115	9012-3629
812	1-18 GHz Amplifier	Wright Technologies ASG18B-4010	0001

5.7.2. Requirements/Limits

FCC	See chapter 1.1.
ANSI	☐ C63.4-2014 ☒ C63.10-2013
Frequency [MHz]	Limits, EIRP in dBm
Frequency with the highest radiated emission contained within a 50 MHz bandwidth from the measurement according to FCC 15.519 (e)	0

5.7.3. Test condition and measurement test set-up

EUT-grounding		☒ none	☐ with power supply	☐ additional connection
Equipment set up		☒ table top 1.5m height		☐ floor standing
Climatic conditions		Temperature: (22±3° C)		Rel. humidity: (40±20)% rH
Spectrum-Analyzer settings	Scan-Mode Detector RBW/VBW Mode: Sweep-Time	☐ 6 dB EMI-Receiver Mode ☒ 3 dB Spectrum analyzer Mode MaxPeak 50 MHz / 80 MHz Repetitive-Scan, max-hold ≤ 1 ms over each measurement bin		
General measurement procedures		Please see chapter "Test system set-up for radiated electric field measurements above 1 GHz"		

5.7.4. Measurement Results

The results are presented below in summary form only. For more information please consult the diagrams included in annex 1.

Measurement No	f_c, [MHz]	f_{max}, [MHz]	OP-mode No	Remark	Detector	Result
1	3993.6	3989.1	1	5 V DC power supply	Peak	passed
2*	3993.6	3912.7	6	3.7 V battery	Peak	passed

Mode 6 was used only for radiated emissions test in frequency range 1610 MHz – 3100 MHz and 10600 MHz – 40000 MHz (retesting according to FCC 15.519). Measurement No 2 was made for mode 6 only to check whether the radiated power of the UWB signal of the second EUT is not higher as the specified limit.

5.8. Antenna requirement according to FCC 15.203

The antenna is permanently affixed to the module.

5.9. Measurement uncertainties

The reported uncertainties are calculated based on the standard uncertainty multiplied with the appropriate coverage factor **k**, such that a confidence level of approximately 95% is achieved.
For uncertainty determination, each component used in the concrete measurement set-up was taken in account and it's contribution to the overall uncertainty according it's statistical distribution calculated.

Following table shows expectable uncertainties for each measurement type performed.

RF-Measurement	Reference	Frequency range	Calculated uncertainty based on a confidence level of 95%						Remarks
Conducted emissions (U_{CISPR})	CISPR 16-2-1	9 kHz - 150 kHz 150 kHz - 30 MHz	4.0 dB 3.6 dB						-
Radiated emissions Enclosure	CISPR 16-2-3	30 MHz - 1 GHz 1 GHz - 18 GHz	4.2 dB 5.1 dB						E-Field
Disturbance power	CISPR 16-2-2	30 MHz - 300 MHz	-						-
Power Output radiated	-	30 MHz - 4 GHz	3.17 dB						Substitution method
Power Output conducted	-	Set-up No.	Cel-C1	Cel-C2	BT1	W1	W2	--	
		9 kHz - 12.75 GHz	N/A	0.60	0.7	0.25	N/A	--	-
		12.75 GHz - 26.5 GHz	N/A	0.82	--	N/A	N/A	--	
Conducted emissions on RF-port	-	9 kHz - 2.8 GHz	0.70	N/A	0.70	N/A	0.69	--	N/A - not applicable
		2.8 GHz - 12.75 GHz	1.48	N/A	1.51	N/A	1.43	--	
		12.75 GHz – 18 GHz	1.81	N/A	1.83	N/A	1.77	--	
		18 GHz - 26.5 GHz	1.83	N/A	1.85	N/A	1.79	--	
Power density	-	1 GHz – 2.8 GHz	1.40 dB						--
Occupied bandwidth	-	9 kHz - 4 GHz	0.1272 ppm (Delta Marker)						Frequency error
			1.0 dB						Power
Emission bandwidth	- -	9 kHz - 4 GHz	0.1272 ppm (Delta Marker)						Frequency error
			See above: 0.70 dB						Power
Frequency stability	-	9 kHz - 20 GHz	0.0636 ppm						-
Radiated emissions Enclosure	-	150 kHz - 30 MHz 30 MHz - 1 GHz 1 GHz - 20 GHz	5.0 dB 4.2 dB 3.17 dB						Magnetic field E-field Substitution

Table: measurement uncertainties, valid for conducted/radiated measurements

6. Abbreviations used in this report

The abbreviations	
ANSI	American National Standards Institute
AV , AVG, CAV	Average detector
EIRP	Equivalent isotropically radiated power, determined within a separate measurement
EGPRS	Enhanced General Packet Radio Service
EUT	Equipment Under Test
FCC	Federal Communications Commission, USA
IC	Industry Canada
n.a.	not applicable
Op-Mode	Operating mode of the equipment
PK	Peak
RBW	resolution bandwidth
RF	Radio frequency
RSS	Radio Standards Specification, Documents from Industry Canada
Rx	Receiver
TCH	Traffic channel
Tx	Transmitter
QP	Quasi peak detector
VBW	Video bandwidth
ERP	Effective radiated power

7. Accreditation details of CETECOM's laboratories and test sites

Ref.-No.	Accreditation Certificate	Valid for laboratory area or test site	Accreditation Body
-	D-PL-12047-01-01	All laboratories and test sites of CETECOM GmbH, Essen	DAkkS, Deutsche Akkreditierungsstelle GmbH
337 487 558 348 348	(MRA US-EU 0003)	Radiated Measurements 30 MHz to 1 GHz, 3 m / 10 m (OATS) Radiated Measurements 30 MHz to 1 GHz, 3 m (SAR) Radiated Measurements above 1 GHz, 3 m (FAR) Mains Ports Conducted Interference Measurements Telecommunication Ports Conducted Interference Measurem.	FCC, Federal Communications Commission Laboratory Division, USA
337 487 550 558	-- 3462D-2 3462D-2 3462D-3	Radiated Measurements 30 MHz to 1 GHz, 3 m / 10 m (OATS) Radiated Measurements 30 MHz to 1 GHz, 3 m (SAR) Radiated Measurements 1 GHz to 6 GHz, 3 m (SAR) Radiated Measurements above 1 GHz, 3 m (FAR)	ISED, Industry Canada Certification and Engineering Bureau
487 550 348 348	R- 4452 G- 20013 C- 20009 T- 20006	Radiated Measurements 30 MHz to 1 GHz, 3 m (SAR) Radiated Measurements 1 GHz to 6 GHz, 3 m (SAR) Mains Ports Conducted Interference Measurements Telecommunication Ports Conducted Interference Measurem.	VCCI, Voluntary Control Council for Interference by Information Technology Equipment, Japan
OATS = Open Area Test Site, SAR = Semi Anechoic Room, FAR = Fully Anechoic Room			

8. Instruments and Ancillary

8.1. Used equiment "CTC"

The "Ref.-No" in the left column of the following tables allows the clear identification of the laboratory equipment.

8.1.1. Test software and firmware of equipment

Ref.-No.	Equipment	Type	Serial-No.	Version of Firmware or Software during the test
001	EMI Test Receiver	ESS	825132/017	Firm.= 1.21 , OTP=2.0, GRA=2.0
012	Signal Generator (EMS-cond.)	SMY 01	839069/027	Firm.= V 2.02
013	Power Meter (EMS cond.)	NRVD	839111/003	Firm.= V 1.51
017	Digital Radiocommunication Tester	CMD 60 M	844365/014	Firmware = V 3.52 .22.01.99, DECT = D2.87 13.01.99
053	Audio Analyzer	UPA3	860612/022	Firm. V 4.3
119	RT Harmonics Analyzer dig. Flickermeter	B10	G60547	Firm.= V 3.1DHG
140	Signal Generator	SMHU	831314/006	Firm.= 3.21
261	Thermal Power Sensor	NRV-Z55	825083/0008	EPROM-Datum 02.12.04, SE EE 1 B
262	Power Meter	NRV-S	825770/0010	Firm.= 2.6
263	Signal Generator	SMP 04	826190/0007	Firm.=3.21
295	Racal Digital Radio Test Set	6103	1572	UNIT Firmware= 4.04, SW-Main=4.04, SW-BBP=1.04, SW-DSP=1.02, Hardboot=1.02, Softboot=2.02
298	Univ. Radio Communication Tester	CMU 200	832221/091	R&S Test Firmware =3.53 /3.54 (current Testsoftw. f. all band used
323	Digital Radiocommunication Tester	CMD 55	825878/0034	Firm.= 3.52 .22.01.99
335	CTC-EMS-Conducted	System EMS Conducted	-	EMC 32 V 8.52
340	Digital Radiocommunication Tester	CMD 55	849709/037	Firm.= 3.52 .22.01.99
355	Power Meter	URV 5	891310/027	Firm.= 1.31
365	10V Insertion Unit 50 Ohm	URV5-Z2	100880	Eprom Data = 31.03.08
366	Ultra Compact Simulator	UCS 500 M4	V0531100594	Firm. UCS 500=001925/3.06a02, rc=ISMIEC 4.10
371	Bluetooth Tester	CBT32	100153	CBT V5,30+ SW-Option K55, K57
377	EMI Test Receiver	ESCS 30	100160	Firm.= 2.30, OTP= 02.01, GRA= 02.36
378	Broadband RF Field Monitor	RadiSense III	03D00013SNO-08	Firm.= V.03D13
389	Digital Multimeter	Keithley 2000	0583926	Firm. = A13 (Mainboard) A02 (Display)
392	Radio Communication Tester	MT8820A	6K00000788	Firm.= 4.50 #005, IPL=4.01#001,OS=4.02#001, GSM=4.41#013, W-CDMA= 4.54#004, scenario= 4.52#002
436	Univ. Radio Communication Tester	CMU 200	103083	R&S Test Firmware Base=5.14, Mess-Software= GSM:5.14 WCDMA:5.14 (current Testsoftw. F. all band
441	CTC-SAR-EMI Cable Loss	System EMI field (SAR)	-	EMC 32 Version 8.52
442	CTC-SAR-EMS	System EMS field (SAR)	-	EMC 32 Version 8.40
443	CTC-FAR-EMI-RSE	System CTC-FAR-EMI-RSE	-	Spuri 7.2.5 or EMC 32 Ver. 9.15.00
444	CTC-FAR-EMS field	System-EMS-Field (FAR)	-	EMC 32 Version 9.15.00
460	Univ. Radio Communication Tester	CMU 200	108901	R&S Test Firmware Base=5.14, GSM=5.14 WCDMA=5.14 (current Testsoftw.,f. all band to be used,
489	EMI Test Receiver	ESU40	1000-30	Firmware=4.43 SP3, Bios=V5.1-16-3, Spec. =01.00
491	ESD Simulator dito	ESD dito	dito307022	V 2.30
524	Voltage Drop Simulator	VDS 200	0196-16	Software Nr: 000037 Version V4.20a01
526	Burst Generator	EFT 200 A	0496-06	Software Nr. 000034 Version V2.32
527	Micro Pulse Generator	MPG 200 B	0496-05	Software-Nr. 000030 Version V2.43
528	Load Dump Simulator	LD 200B	0496-06	Software-Nr. 000031 Version V2.35a01
546	Univ. Radio Communication Tester	CMU 200	106436	R&S Test Firmware Base=5.14, GSM=5.14 WCDMA=5.14 (current Testsoftw.,f. all band to be used
547	Univ. Radio Communication Tester	CMU 200	835390/014	R&S Test Firmware Base=V5.1403 (current Testsoftw., f. all band used, GSM = 5.14 WCDMA: = 5.14
584	Spectrum Analyzer	FSU 8	100248	2.82_SP3
597	Univ. Radio Communication Tester	CMU 200	100347	R&S Test Firmware Base=5.01, GSM=5.02 WCDMA= not installed, Mainboard= µP1=V.850
598	Spectrum Analyzer	FSEM 30	831259/013	Firmware Bios 3.40 , Analyzer 3.40 Sp 2
607	Signal Generator	SMR 20	832033/011	V1.25
620	EMI Test Receiver	ESU 26	100362	4.43_SP3
642	Wideband Radio Communication Tester	CMW 500	126089	Setup V03.26, Test programm component V03.02.20
670	Univ. Radio Communication Tester	CMU 200	106833	µP1 =V8.50, Firmware = V.20
689	Vector Signal Generator	SMU200	100970	02.20.360.142
692	Bluetooth Tester	CBT 32	100236	CBT V 5.40, FW: V.2.41 (FPGA Digital, V. 3.09 FPGA RF)

8.1.2. Single instruments and test systems

Ref.-No.	Equipment	Type	Serial-No.	Manufacturer	Interval of calibration	Remark	Cal due
005	AC - LISN (50 Ohm/50µH, test site 1)	ESH2-Z5	861741/005	Rohde & Schwarz	12 M	-	23.05.2020
007	Single-Line V-Network (50 Ohm/5µH)	ESH3-Z6	892563/002	Rohde & Schwarz	12 M	-	23.05.2020
009	Power Meter (EMS-radiated)	NRV	863056/017	Rohde & Schwarz	24 M	-	23.05.2021
016	Line Impedance Simulating Network	Op. 24-D	B6366	Spitzenberger+Spies	36 M	-	22.05.2022
020	Horn Antenna 18 GHz (Subst 1)	3115	9107-3699	EMCO	36/12 M	-	31.07.2021
021	Loop Antenna (H-Field)	6502	9206-2770	EMCO	36 M	-	30.05.2021
033	RF-current probe (100kHz-30MHz)	ESH2-Z1	879581/18	Rohde & Schwarz	24 M	-	23.05.2021
057	relay-switch-unit (EMS system)	RSU	494440/002	Rohde & Schwarz	pre-m	1a	
060	power amplifier (DC-2kHz)	PAS 5000	B6363	Spitzenberger+Spies	-	3	
066	notch filter (WCDMA; FDD1)	WRCT 1900/2200-5/40-10EEK	5	Wainwright GmbH	12 M	1g	16.11.2019
086	DC - power supply, 0 -10 A	LNG 50-10	-	Heinzinger Electronic	pre-m	2	
087	DC - power supply, 0 -5 A	EA-3013 S	-	Elektro Automatik	pre-m	2	
091	USB-LWL-Converter	OLS-1	007/2006	Ing. Büro Scheiba	-	4	
099	passive voltage probe	ESH2-Z3	299.7810.52	Rohde & Schwarz	36 M	-	30.05.2021
100	passive voltage probe	Probe TK 9416	without	Schwarzbeck	36 M	-	30.05.2021
110	USB-LWL-Converter	OLS-1	-	Ing. Büro Scheiba	-	4	
119	RT Harmonics Analyzer dig. Flickermeter	B10	G60547	BOCONSULT	36 M	-	22.05.2022
133	horn antenna 18 GHz (Meas 1)	3115	9012-3629	EMCO	36 M	1c	10.03.2020
134	horn antenna 18 GHz (Subst 2)	3115	9005-3414	EMCO	36 M	-	10.03.2020
248	attenuator	SMA 6dB 2W	-	Radiall	pre-m	2	
249	attenuator	SMA 10dB 10W	-	Radiall	pre-m	2	
252	attenuator	N 6dB 12W	-	Radiall	pre-m	2	
256	attenuator	SMA 3dB 2W	-	Radiall	pre-m	2	
257	hybrid	4031C	04491	Narda	pre-m	2	
260	hybrid coupler	4032C	11342	Narda	pre-m	2	
261	Thermal Power Sensor	NRV-Z55	825083/0008	Rohde & Schwarz	24 M	-	30.05.2020
262	Power Meter	NRV-S	825770/0010	Rohde & Schwarz	24 M	-	30.05.2020
265	peak power sensor	NRV-Z33, Model 04	840414/009	Rohde & Schwarz	24 M	-	30.05.2020
266	Peak Power Sensor	NRV-Z31, Model 04	843383/016	Rohde & Schwarz	24 M	-	30.05.2020
267	notch filter GSM 850	WRCA 800/960-6EEK	9	Wainwright GmbH	pre-m	2	
270	termination	1418 N	BB6935	Weinschel	pre-m	2	
271	termination	1418 N	BE6384	Weinschel	pre-m	2	
272	attenuator (20 dB) 50 W	Model 47	BF6239	Weinschel	pre-m	2	
273	attenuator (10 dB) 100 W	Model 48	BF9229	Weinschel	pre-m	2	
274	attenuator (10 dB) 50 W	Model 47 (10 dB) 50 W	BG0321	Weinschel	pre-m	2	
275	DC-Block	Model 7003 (N)	C5129	Weinschel	pre-m	2	
276	DC-Block	Model 7006 (SMA)	C7061	Weinschel	pre-m	2	
279	power divider	1515 (SMA)	LH855	Weinschel	pre-m	2	
287	pre-amplifier 25MHz - 4GHz	AMF-2D-100M4G-35-10P	379418	Miteq	12 M	1c	16.11.2019
291	high pass filter GSM 850/900	WHJ 2200-4EE	14	Wainwright GmbH	12 M	1c	16.11.2019
298	Univ. Radio Communication Tester	CMU 200	832221/091	Rohde & Schwarz	pre-m	3	
300	AC LISN (50 Ohm/50µH, 1-phase)	ESH3-Z5	892 239/020	Rohde & Schwarz	12 M	-	22.05.2020
301	attenuator (20 dB) 50W, 18GHz	47-20-33	AW0272	Lucas Weinschel	pre-m	2	
302	horn antenna 40 GHz (Meas 1)	BBHA9170	155	Schwarzbeck	36 M	-	14.03.2020
303	horn antenna 40 GHz (Subst 1)	BBHA9170	156	Schwarzbeck	36 M	-	20.03.2020
331	Climatic Test Chamber -40/+180 Grad	HC 4055	43146	Heraeus Vötsch	24 M	-	10.01.2021
341	Digital Multimeter	Fluke 112	81650455	Fluke	24 M	-	30.05.2020
342	Digital Multimeter	Voltcraft M-4660A	IB 255466	Voltcraft	24 M	-	23.05.2021
347	laboratory site	radio lab.	-	-	-	5	
348	laboratory site	EMI conducted	-	-	-	5	
354	DC - Power Supply 40A	NGPE 40/40	448	Rohde & Schwarz	pre-m	2	
357	power sensor	NRV-Z1	861761/002	Rohde & Schwarz	24 M	-	21.05.2021
373	Single-Line V-Network (50 Ohm/5µH)	ESH3-Z6	100535	Rohde & Schwarz	12 M	-	22.05.2020
377	EMI Test Receiver	ESCS 30	100160	Rohde & Schwarz	12 M	-	22.05.2020
389	Digital Multimeter	Keithley 2000	0583926	Keithley	pre-m	-	
392	Radio Communication Tester	MT8820A	6K00000788	Anritsu	12 M	-	01.07.2020
396	Thermo/Hygrometer	Thermo/Hygrometer	-	Conrad	24 M	-	09.01.2021
431	Model 7405	Near-Field Probe Set	9305-2457	EMCO	-	4	
436	Univ. Radio Communication Tester	CMU 200	103083	Rohde & Schwarz	12 M	-	25.05.2020
439	UltraLog-Antenna	HL 562	100248	Rohde & Schwarz	36 M	-	10.03.2020
443	CTC-FAR-EMI-RSE	System CTC-FAR-EMI-RSE	-	ETS-Lindgren / CETECOM	12 M	5	16.11.2019
448	notch filter WCDMA_FDD II	WRCT 1850.0/2170.0-5/40-10SSK	5	Wainwright Instruments GmbH	12 M	1c	16.11.2019
449	notch filter WCDMA FDD V	WRCT 824.0/894.0-5/40-8SSK	1	Wainwright	12 M	1c	16.11.2019
454	Oscilloscope	HM 205-3	9210 P 29661	Hameg	-	4	

Ref.-No.	Equipment	Type	Serial-No.	Manufacturer	Interval of calibration	Remark	Cal due
456	DC-Power supply 0-5 A	EA 3013 S	207810	Elektro Automatik	pre-m	2	
459	DC -Power supply 0-5 A , 0-32 V	EA-PS 2032-50	910722	Elektro Automatik	pre-m	2	
460	Univ. Radio Communication Tester	CMU 200	108901	Rohde & Schwarz	12 M	-	30.05.2020
463	Universal source	HP3245A	2831A03472	Agilent	-	4	
466	Digital Multimeter	Fluke 112	89210157	Fluke USA	24 M	-	30.05.2020
467	Digital Multimeter	Fluke 112	89680306	Fluke USA	36 M	-	30.05.2021
468	Digital Multimeter	Fluke 112	90090455	Fluke USA	36 M	-	30.04.2021
477	ReRadiating GPS-System	AS-47	-	Automotive Cons. Fink	-	3	
480	power meter (Fula)	NRVS	838392/031	Rohde & Schwarz	24 M	-	30.05.2021
482	filter matrix	Filter matrix SAR 1	-	CETECOM (Brl)	-	1d	
484	pre-amplifier 2,5 - 18 GHz	AMF-5D-02501800-25-10P	1244554	Miteq	12 M	-	16.11.2019
487	System CTC NSA-Verification SAR-EMI	System EMI field (SAR) NSA	-	ETS Lindgren / CETECOM	24 M	-	16.04.2021
489	EMI Test Receiver	ESU40	1000-30	Rohde & Schwarz	12 M	-	30.06.2020
502	band reject filter	WRCG 1709/1786-1699/1796-	SN 9	Wainwright	pre-m	2	
503	band reject filter	WRCG 824/849-814/859-60/10SS	SN 5	Wainwright	pre-m	2	
512	notch filter GSM 850	WRCA 800/960-02/40-6EEK	SN 24	Wainwrght	12 M	1c	16.11.2019
517	relais switch matrix	HF Relais Box Keithley System	SE 04	Keithley	pre-m	2	
523	Digital Multimeter	L4411A	MY46000154	Agilent	24 M	-	23.05.2021
529	6 dB Broadband resistive power divider	Model 1515	LH 855	Weinschel	pre-m	2	
530	10 dB Broadband resistive power divider	R 416110000	LOT 9828	-	pre-m	2	
549	Log.Per-Antenna	HL025	1000060	Rohde & Schwarz	36/12 M	-	31.07.2021
552	high pass filter 2,8-18GHz	WHKX 2.8/18G-10SS	4	Wainwright	12 M	1c	16.11.2019
557	System CTC-OTA-2	R&S TS8991	-	Rohde & Schwarz	12 M	5	24.01.2020
574	Biconilog Hybrid Antenna	BTA-L	980026L	Frankonia	36/12 M	-	03.05.2022
584	Spectrum Analyzer	FSU 8	100248	Rohde & Schwarz	pre-m	-	
594	Wideband Radio Communication Tester	CMW 500	101757	Rohde & Schwarz	12 M	-	26.06.2020
597	Univ. Radio Communication Tester	CMU 200	100347	Rohde & Schwarz	pre-m	-	
600	power meter	NRVD (Reserve)	834501/018	Rohde & Schwarz	24 M	-	30.05.2021
602	peak power sensor	NRV-Z32 (Reserve)	835080	Rohde & Schwarz	24 M	-	
611	DC power supply	E3632A	KR 75305854	Agilent	pre-m	2	
612	DC power supply	E3632A	MY 40001321	Agilent	pre-m	2	
613	Attenuator	R416120000 20dB 10W	Lot. 9828	Radiall	pre-m	2	
616	Digitalmultimeter	Fluke 177	88900339	Fluke	24 M	-	30.05.2020
617	Power Splitter/Combiner	ZFSC-2-2-S+	S F987001108	Mini Circuits	-	2	
618	Power Splitter/Combiner	50PD-634	600994	JFW Industries USA	-	2	
619	Power Splitter/Combiner	50PD-634	600995	JFW Industries, USA	-	3	
620	EMI Test Receiver	ESU 26	100362	Rohde-Schwarz	12 M	-	30.05.2020
621	Step Attenuator 0-139 dB	RSP	100017	Rohde & Schwarz	pre-m	2	
625	Generic Test Load USB	Generic Test Load USB	-	CETECOM	-	2	
634	Spectrum Analyzer	FSM (HF-Unit)	826188/010	Rohde & Schwarz	pre-m	2	
637	High Speed HDMI with Ethernet 1m	HDMI cable with Ethernet 1m	-	KogiLink	-	2	
638	HDMI Kabel with Ethernet 1,5 m flach	HDMI cable with Ethernet 1,5m	-	Reichelt	-	2	
640	HDMI cable 2m rund	HDMI cable 2m rund	-	Reichelt	-	2	
641	HDMI cable with Ethernet	Certified HDMI cable with	-	PureLink	-	2	
644	Amplifierer	ZX60-2534M+	SN865701299	Mini-Circuits	-	-	
670	Univ. Radio Communication Tester	CMU 200	106833	Rohde & Schwarz	24 M	-	30.05.2020
671	DC-power supply 0-5 A	EA-3013S	-	Elektro Automatik	pre-m	2	
678	Power Meter	NRP	101638	Rohde&Schwarz	pre-m	-	
683	Spectrum Analyzer	FSU 26	200571	Rohde & Schwarz	12 M	-	30.05.2020
687	Signal Generator	SMF 100A	102073	Rohde&Schwarz	12 M	-	30.05.2020
688	Pre Amp	JS-18004000-40-8P	1750117	Miteq	pre-m	-	
690	Spectrum Analyzer	FSU	100302/026	Rohde&Schwarz	24 M	-	30.05.2021
691	OSP120 Base Unit	OSP120	106833	Rohde & Schwarz	12 M	-	30.05.2020
692	Bluetooth Tester	CBT 32	100236	Rohde & Schwarz	36 M	-	29.05.2020
693	TS8997	CTC-Radio Lab 1_TS8997	-	Rohde&Schwarz	12 M	5	07.01.2020
697	Power Splitter	ZN4PD-642W-S+	165001445	Mini-Circuits	-	2	
701	CMW500 wide. Radio Comm.	CMW500	158150	Rohde & Schwarz	24 M	-	30.07.2020
703	INNCO Antennen Mast	MA 4010-KT080-XPET-ZSS3	MA4170-KT100-XPET-ZSS3	INNCO	pre-m	-	
704	INNCON Controller	CO 3000-4port	CO3000/933/384105 16/L	INNCO Systems GmBh	pre-m	-	

Ref.-No.	Equipment	Type	Serial-No.	Manufacturer	Interval of calibration	Remark	Cal due
711	Harmonic Mixer 90 GHz - 140GHz	RPG FS-Z140	101004	RPG	36 M	-	22.02.2020
712	Harmonic Mixer 75 GHz - 110GHz	FS-Z110	101468	Rohde & Schwarz	36 M	-	22.02.2020
713	Harmonic Mixer, 50 GHz - 75GHz	FS-Z75	101022	Rohde & Schwarz	24 M	-	05.07.2021
714	Signal Analyzer 67GHz	FSW67	104023	Rohde & Schwarz	24 M	-	04.07.2021
715	Harmonic Mixer, 140 GHz - 220GHz	FS-Z220	101009	RPG Radiometer Physics	36 M	-	03.08.2020
716	Harmonic Mixer 220 GHz to 325 GHZ	FS-Z325	101005	RPG Radiometer Physics	36 M	-	13.02.2020
748	Pickett-Potter Horn Antenna	FH-PP 4060	010001	Radiometer Physiscs	36 M	-	
750	Pickett-Potter Horn Antenna	FH-PP 220	010011	Radiometer Physics	36 M	-	
751	Digital Optical System	optoCAN-FD Transceiver	17-010416	mk-messtechnik GmbH	-	-	
752	Digital Optical System	optoCAN-FD Transceiver	17-010083	mk-messtechnik GmbH	-	-	
753	Digital Optical System	optoCAN-FD Transceiver	17-010084	mk-messtechnik GmbH	-	-	
754	Digital Optical System	optoCAN-FD Transceiver	17-010415	mk-messtechnik GmbH	-	-	
755	Digital Optical System	optoLAN-100-MAX Transceiver	17-010795	mk-messtechnik GmbH	-	-	
757	WIDEBAND RADIO COMMUNICATION	CMW500	163673	Rohde&Schwarz	12 M	-	30.05.2020
758	Signal Generator	SMU 200A	100754	Rohde & Schwarz	24 M	-	11.10.2019
781	Power Supply	PS 2042-10 B	2815450369	Elektro-Automatik GmbH &Co.KG	-	-	
782	Power Supply	PS 2042-10 B	2815450348	lektro-Automatik GmbH &Co.KG	-	-	
783	Spectrum Analyzer	FSU 26	100414	Rohde & Schwarz	12 M	-	30.05.2020
784	Power Supply	NGSM 32/10	00196	Rohde & Schwarz	12 M	-	
785	RSP	RF Step Attenuator 0…139.9dB	860712/012	Rohde & Schwarz	12 M	-	
786	SAR Probe	ES3DV3	3340	Speag	36 M	-	14.02.2021
787	OSP	OSP B157WX	101264	Rohde & Schwarz	24 M	-	30.05.2020
788	Precision Omnidirectional Dipole	POD 618	6182558/Q	Seibersdorf Labaratories	36 M	-	30.06.2021
789	Precision Omnidirectional Dipole	POD 16	162496/Q	Seibersdorf Laboratories	36 M	-	30.06.2021
790	Horn Antenna	ASY-SGH-124-SMA	29F14182337	Antenna System Solutions	36 M	-	08.10.2021
791	Pickett-Potter Horn Antenna	FH-PP-325	10024	Radiometer Physics	36 M	-	
792	Pickett-Potter Horn Antenna	FH-PP 075	10006	Radiometer Physics	36 M	-	
793	Pickett-Potter Horn Antenna	FH-PP 140	10008	Radiometer Physics	36 M	-	
794	Pickett-Potter Horn Antenna	FH-PP 110	10014	Radiometer Physics	36 M	-	
795	SGH Antenna	SGH-26-WR10	1144	Anteral S.L.	36 M	-	
798	WR-22 Rectangular Gain Horn	SAR-2309-22-S2	13254-01	SAGE Millimeter, Inc.	36 M	-	
799	Transceiver	optoLAN-Gb	18-014746	mk messtechnik	pre-m	-	
801	Spectrum Analyzer	FSP 13	100960	Rohde & Schwarz	24 M	-	14.01.2021
802	Exposure Level Tester	ELT-400	O-0026	NARDA Safety Solutions	24 M	-	30.01.2021
803	Probe	ELT probe 3cm²	O-0026	Narda Safety Test Solution	24 M	-	30.01.2021
805	Thermo-Hygrometer	Web-Thermo-Hygrometer	02749814	W&T	24 M	-	
806	AC2600 Smart Wifi Router	Netgear Nighthawk x4S	5K5188590067B	Netgear	-	-	
807	Direct Coupler	Direct Coupler C-05020-10	511	ET Industries	-	-	
808	Diode Power Sensor	NRV-Z1	829894/001	Rohde & Schwarz	24 M	-	24.05.2021
809	Standard gain Horn Antenna	WR-159 Horn Antenna	-	Pasternack Enterprises Inc.	-	-	
812	1-18 GHz Amplifier	ASG18B-4010	0001	Wright Technologies, Inc.	pre-m	-	

8.1.3. Legend

Note / remarks		Calibrated during system calibration:
	1a	System CTC-SAR-EMS (Ref.-No. 442)
	1b	System-CTC-EMS-Conducted (Ref.-No. 335)
	1c	System CTC-FAR-EMI-RSE (Ref.-No . 443)
	1d	System CTC-SAR-EMI (Ref.-No . 441)
	1e	System CTC-OATS (EMI radiated) (Ref.-No. 337)
	1 f	System CTC-CTIA-OTA (Ref.-No . 420)
	1 g	System CTC-FAR-EMS (Ref.-No . 444)
	2	Calibration or equipment check immediately before measurement
	3	Regulatory maintained equipment for functional check or support purpose
	4	Ancillary equipment without calibration e.g. mechanical equipment or monitoring equipment
	5	Test System

Interval of calibration	12 M	12 month
	24 M	24 month
	36 M	36 month
	24/12 M	Calibration every 24 months, between this every 12 months internal validation
	36/12 M	Calibration every 36 months, between this every 12 months internal validation
	Pre-m	Check before starting the measurement
	-	Without calibration

9. Versions of test reports (change history)

Version	Applied changes	Date of release
	Initial release	2018-07-30
C1	Current release *Differences to other releases:* *General:* FCC 15.517 designation was replaced with designation FCC 15.519. Correspondent limits were accordingly also replaced. Applicant's details were changed (see chapter 2.4.). *Radiated emission test, 1610 MHz – 3100 MHz and 10600 MHz – 40000 MHz:* Radiated emission test was repeated for frequency ranges 1610 MHz – 3100 MHz and 10600 MHz – 40000 MHz to correspond to FCC Regulations Part 15.519 limits. Therefore EUT C and AE 6-8 were added in chapter 3.2. and 3.3. 10 dB BW measurement, radiated emission measurement for UWB central frequency and fundamental emission peak power measurement were also done for EUT C to check its compliance with FCC 15.519 limits. Additional comments were established in subsection 5.2.7. and 5.5.5. to clarify what modes and why were chosen and used for correspondent tests. Additional comment was established in subsection 5.5.3. to clarify how the measurement was done. Subsection 5.5.1. was changed according to the repeated tests. Radiated emissions measurement diagrams in frequency range 1610 MHZ – 3100 MHz and 10600 MHz – 40000 MHz were replaced in Annex 1. Diagrams for 10 dB BW measurement, radiated emission measurement for UWB central frequency and fundamental emission peak power measurement for EUT C were added in Annex 1. Photos of EUT C were added in Annex 2. Test set-up photos for EUT C were added in Annex 4. Updated used detector in section 5.7.4	2019-12-18

The End of the Report