See Items Document Overview. Security INTERNAL. Status RELEASED.

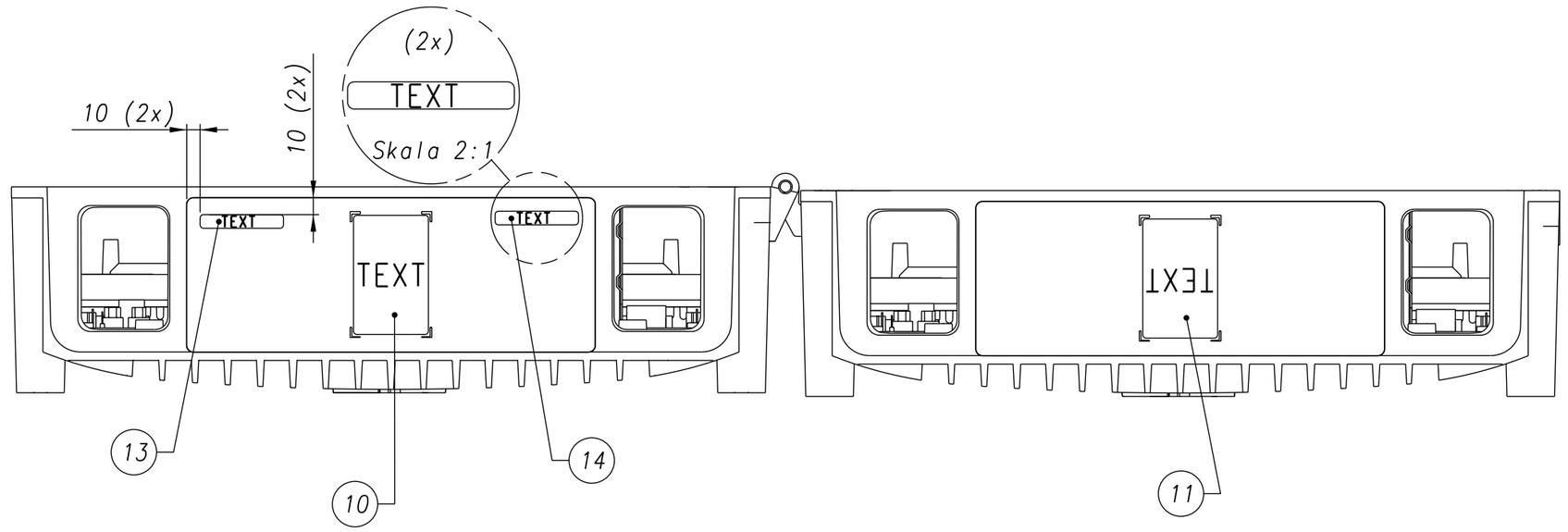


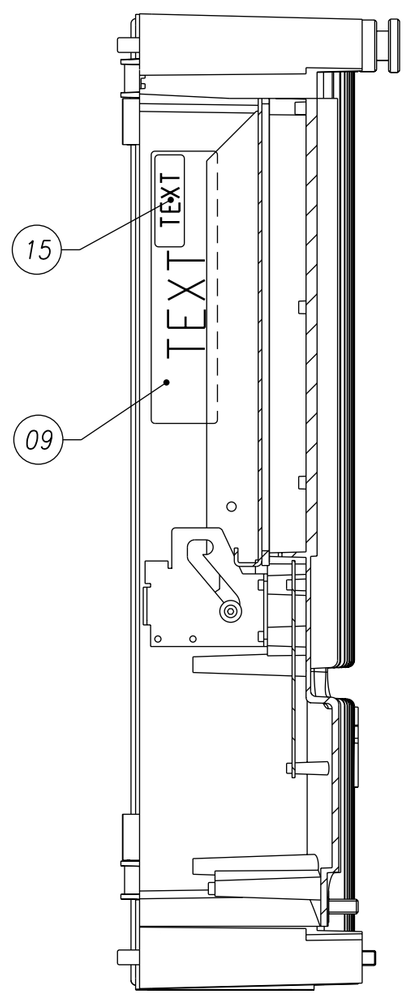


A-A

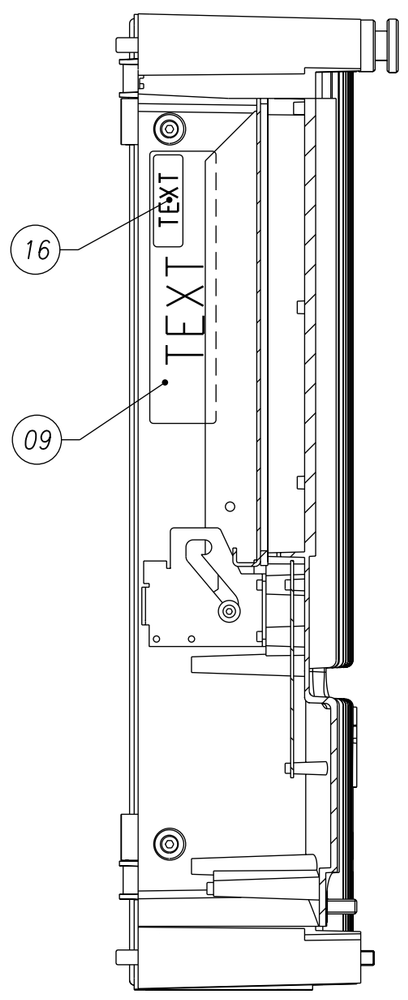


B-B

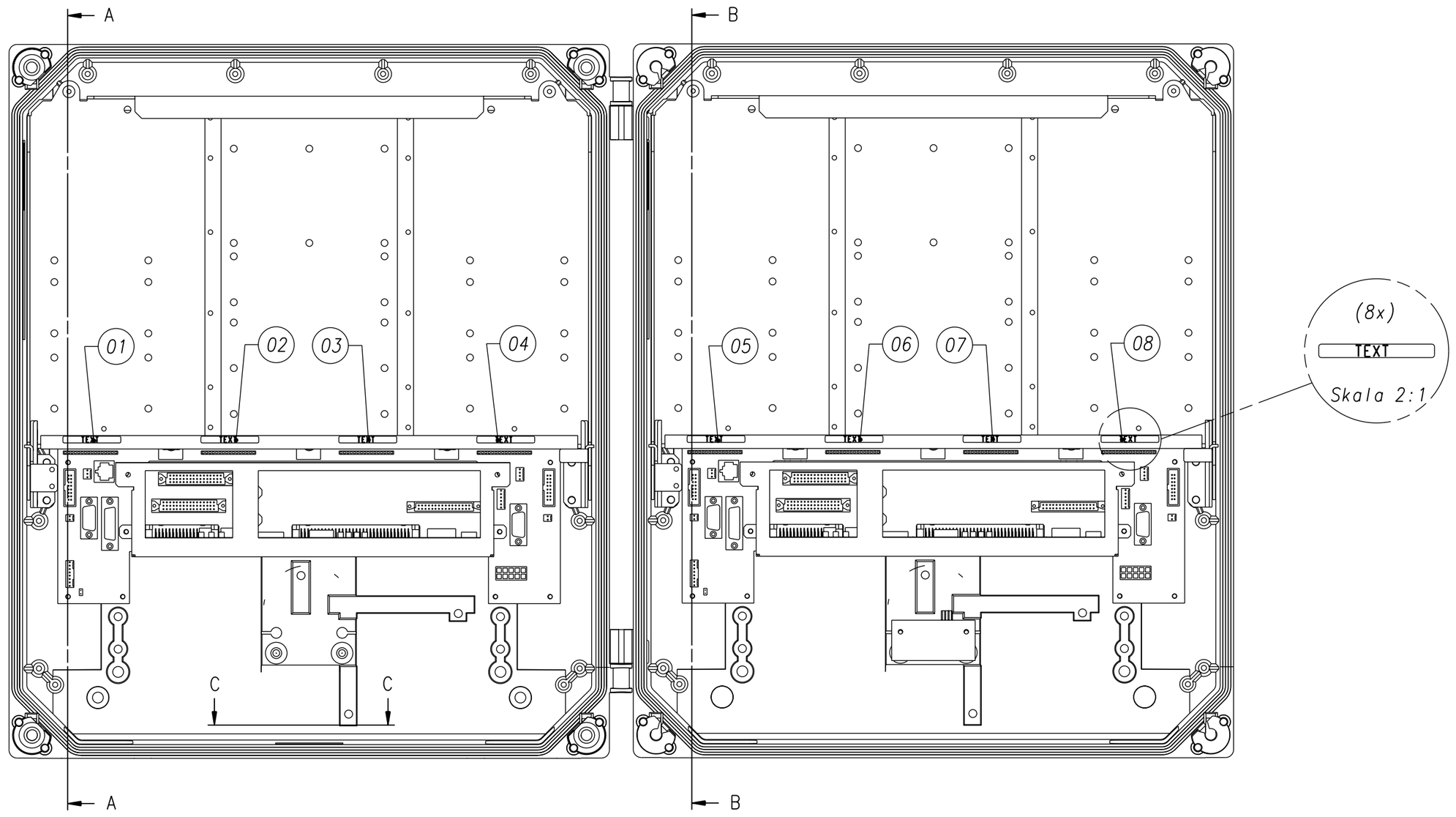


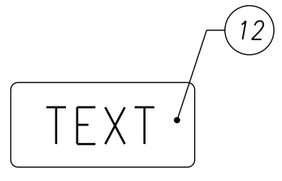


C-C

Skala 2:1

Etikettämnen och textalternativ enligt VD204 60/1

Ej måttsatt etikettplacering skall utföras
så det liknar denna ritning

| POS | No | PART No | NAME | NOTE |
|---|---|---|---|---|
| . | . | . | . | . |
| Material | | | Treatment | Finish |
| . | | | . | . |

| Approved | Checked | Design | Drawn | Sharp edge chamfer | | Tolerance acc | Page |
|---|---|---|---|---|---|---|---|
| | | | .010629 tsc | 0.1-0.3 | | ISO 2768-1 . | . |

| ALLGON INNOVATION AB SWEDEN | Title | Scale | CADfile | Size |
|---|---|---|---|---|
| | .Etikettplacering .Repeater | . | AR1111/008-251 | A2 |
| | | Doc no | | Rev |
| | | AR1111/008-251 | | .A |

| REV | No | Descr | DATE | SIGN | REV | No | Descr | DATE | SIGN |
|---|---|---|---|---|---|---|---|---|---|
| . | . | . | . | . | . | . | . | . | . |

This document and its contents is the property of ALLGON SYSTEM AB
and must not be copied, reproduced, transmitted or disclosede to
any third part without our consent. Contravention will be prosecuted.

This document is issued by means of a computerized system. RELEASED means that the document has been electronically approved. INTERNAL means that all employees can access the document. It may only be distributed outside the company to a specific receiver if approved by authorized employee.