ISSUE	REVISION	DATE:	MADE BY	APPROVED BY
1.0	FIRST REL: FOR PRODUCTION	13 JUN 2001	C.H.CHEN	DENNY HO
	CPU VERSION: 005-164162-349		BARRY	
	PCB VERSION: 016-910580-03		PETER WAN	
2.0	SECOND RELEASE VERSION	5/JULY/01	C.H.CHEN	DENNY HO
3.0	THREE RELEASE VERSION	JULY/27/01	C.H.CHEN	DENNY HO

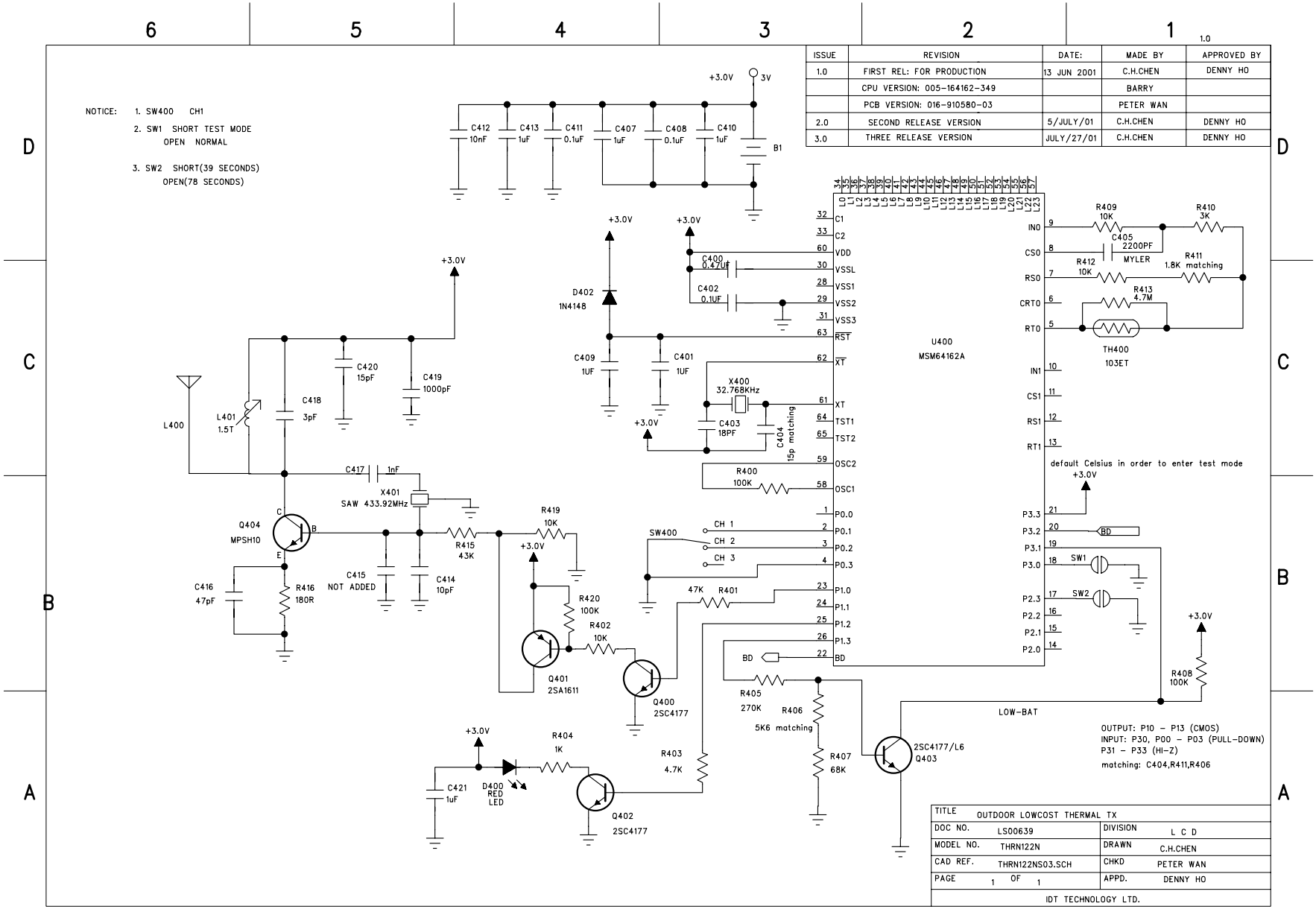

TITLE	OUTDOOR LOWCOST THERMAL TX
DOC NO. LS00639	DIVISION L C D
MODEL NO. THRN122N	DRAWN C.H.CHEN
CAD REF. THRN122NS03.SCH	CHKD PETER WAN
PAGE 1 OF 1	APPD. DENNY HO
IDT TECHNOLOGY LTD.	

LCD-PDD-022-A