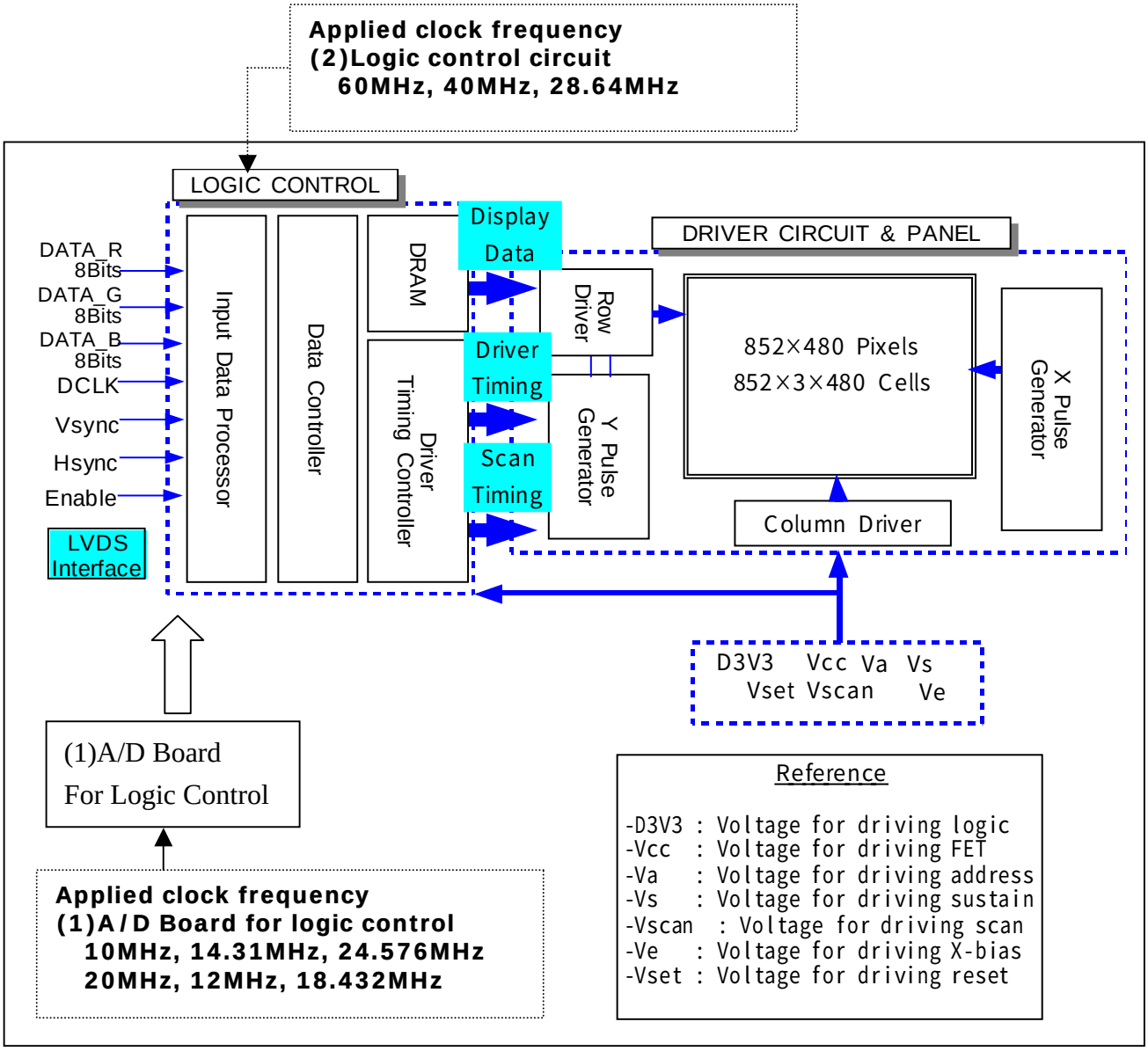PDP BLOCK DIAGRAM