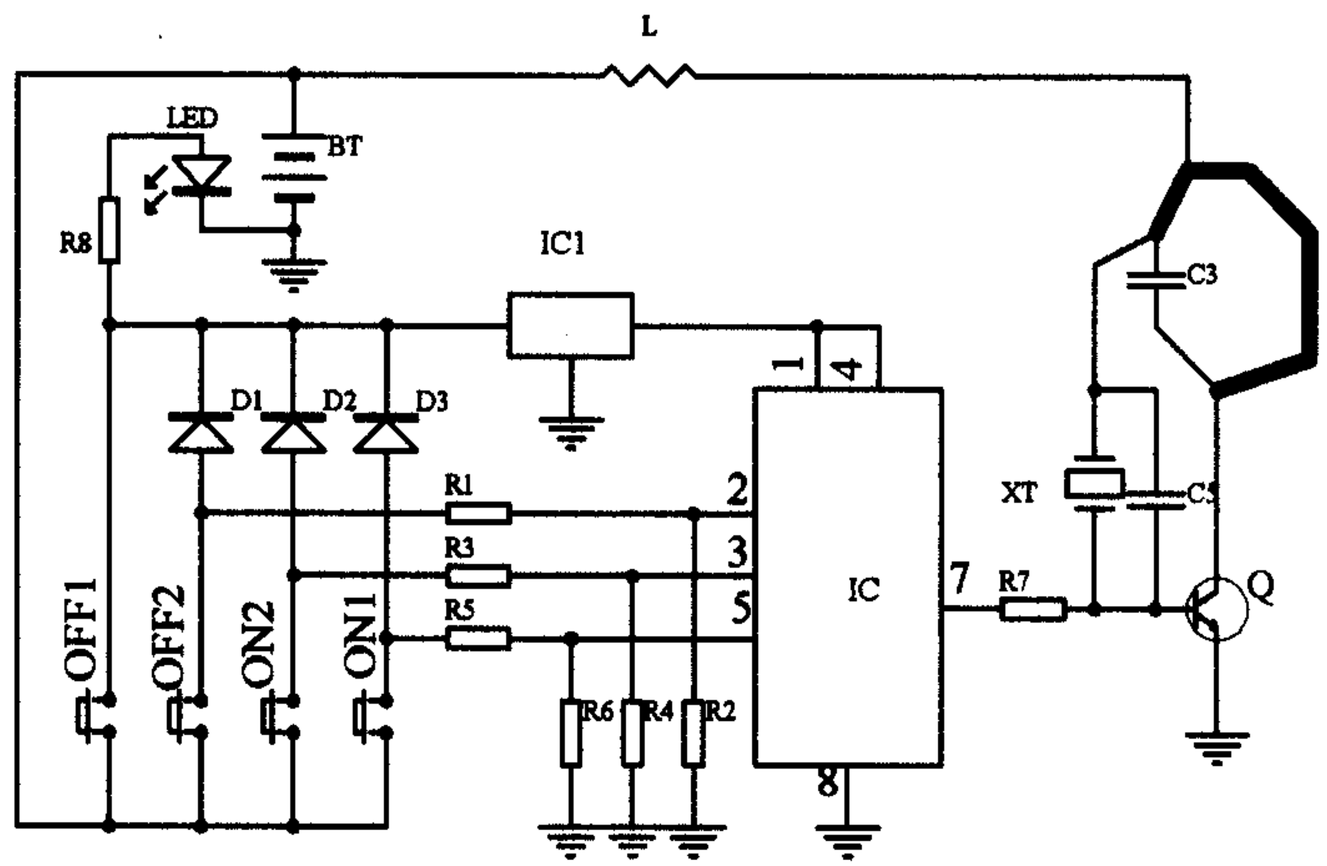


| Title | | |
|---|---|---|
| Size A4 | Number | Revision |
| Date: 24-May-2008 | | Sheet of |
| File: D:\原理图\遥控\YLT-10ADDB | | Drawn By: |