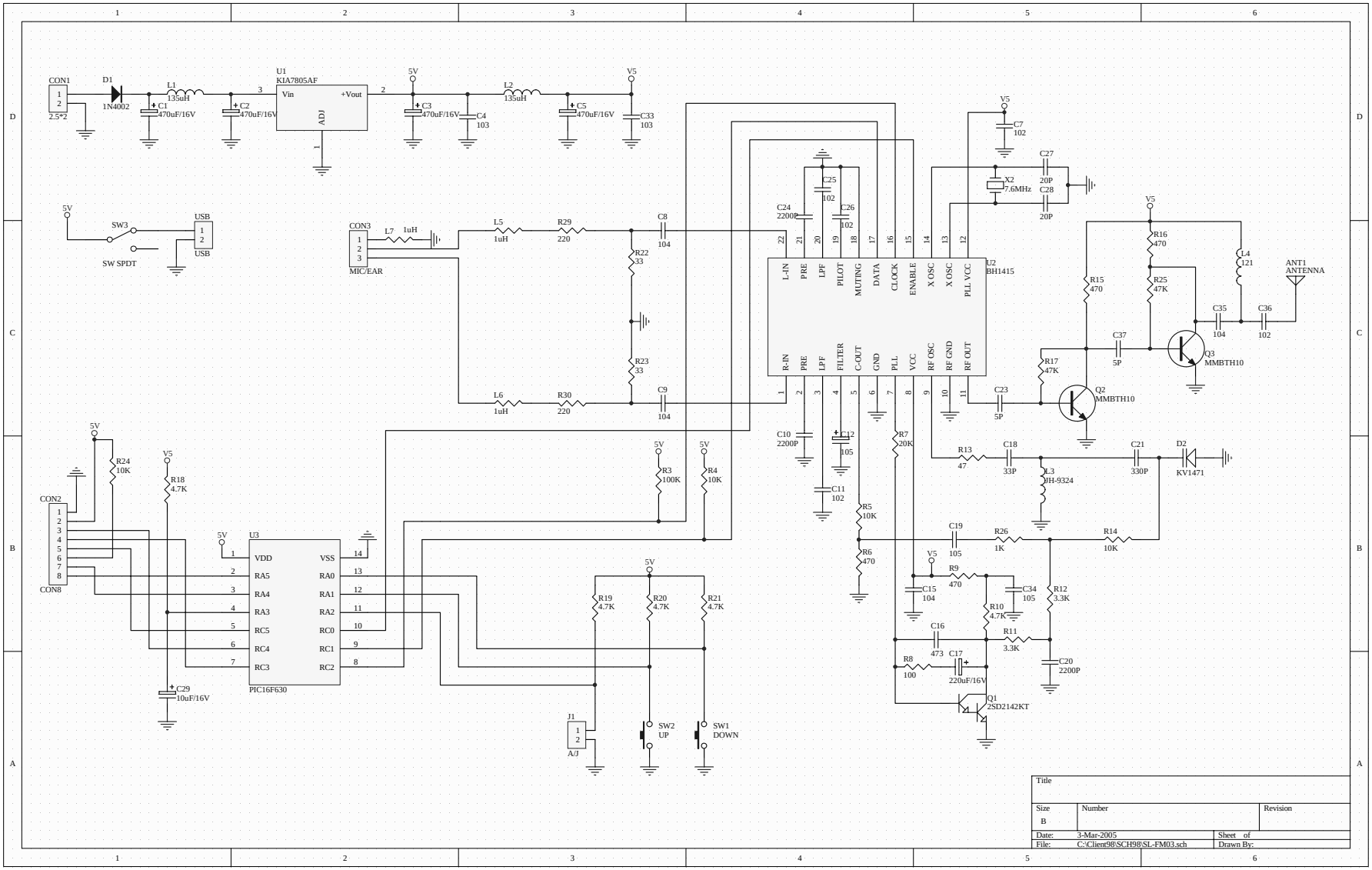
CON1
2.5*2
D1
1N4002
L1
135uH
C1
470uF/16V
C2
470uF/16V
U1
KIA7805AF
Vin
+Vout
ADJ
5V
C3
470uF/16V
C4
103
L2
135uH
C5
470uF/16V
V5
C33
103
SW3
SW SPDT
USB
CON3
MIC/EAR
L7
1uH
L5
1uH
R29
220
C8
104
R22
33
R23
33
L6
1uH
R30
220
C9
104
C24
2200P
C25
102
C26
102
C27
20P
C28
20P
X2
7.6MHz
C7
102
U2
BH1415
L-IN
PRE
LPF
PILOT
MUTING
DATA
CLOCK
ENABLE
X OSC
X OSC
PLL VCC
R-IN
PRE
LPF
FILTER
C-OUT
GND
PLL
VCC
RF OSC
RF GND
RF OUT
C10
2200P
C12
105
C11
102
R7
20K
R5
10K
R6
470
R16
470
R25
47K
R15
470
L4
121
ANT1
ANTENNA
C35
104
C36
102
C37
5P
Q3
MMBTH10
R17
47K
Q2
MMBTH10
C23
5P
R13
47
C18
33P
L3
JH-9324
C21
330P
D2
KV1471
C19
105
R26
1K
R14
10K
R9
470
C15
104
C34
105
R12
3.3K
R10
4.7K
C16
473
R11
3.3K
R8
100
C17
220uF/16V
C20
2200P
Q1
2SD2142KT
R24
10K
R18
4.7K
CON2
CON8
U3
VDD
VSS
RA5
RA0
RA4
RA1
RA3
RA2
RC5
RC0
RC4
RC1
RC3
RC2
PIC16F630
C29
10uF/16V
R3
100K
R4
10K
R19
4.7K
R20
4.7K
R21
4.7K
J1
A/J
SW2
UP
SW1
DOWN
Title
Size
B
Number
Revision
Date:
3-Mar-2005
Sheet of
File:
C:\Client98\SCH98\SL-FM03.sch
Drawn By: