# FCC 47 CFR PART 15 SUBPART E

# CERTIFICATION TEST REPORT

*For*

2 in 1 PC

MODEL No.: M1220KWP

FCC ID: S7JM1220KWP

Trade Mark: N/A

REPORT NO.: ES170217006E4

ISSUE DATE: April 17, 2017

*Prepared for*

SHENZHEN YIFANG DIGITAL TECHNOLOGY CO., LTD.

Building NO.22, 23, Fifth Region, Baiwangxin Industrial Park, Songbai Rd.
Nanshan, Shenzhen 518108, China

*Prepared by*

EMTEK(SHENZHEN) CO., LTD.

Bldg 69, Majialong Industry Zone, Nanshan District,
Shenzhen, Guangdong, China
TEL: 86-755-26954280
FAX: 86-755-26954282

# 1 TEST RESULT CERTIFICATION

| | |
|---|---|
| Applicant: | SHENZHEN YIFANG DIGITAL TECHNOLOGY CO., LTD.<br>Building NO.22, 23, Fifth Region, Baiwangxin Industrial Park , Songbai Rd.<br>Nanshan, Shenzhen 518108, China |
| Manufacturer: | SHENZHEN YIFANG DIGITAL TECHNOLOGY CO., LTD.<br>Building NO.22, 23, Fifth Region, Baiwangxin Industrial Park , Songbai Rd.<br>Nanshan, Shenzhen 518108, China |
| Product Description: | 2 in 1 PC |
| Model Number: | M1220KWP |
| File Number: | ES170217006E4 |
| Date of Test: | February 17, 2017 to April 17, 2017 |

Measurement Procedure Used:

| APPLICABLE STANDARDS | |
|---|---|
| **STANDARD** | **TEST RESULT** |
| FCC 47 CFR Part 2, Subpart J<br>FCC 47 CFR Part 15, Subpart E | **PASS** |

The above equipment was tested by EMTEK(SHENZHEN) CO., LTD.. The test data, data evaluation, test procedures, and equipment configurations shown in this report were made in accordance with the procedures given in ANSI C63.10 (2013) and the energy emitted by the sample EUT tested as described in this report is in compliance with the requirements of FCC Rules Part 2 and Part 15.407

The test results of this report relate only to the tested sample identified in this report.

Date of Test : February 17, 2017 to April 17, 2017

Prepared by : Yaping Shen/Editor

Reviewer : Joe Xia/Supervisor

Approve & Authorized Signer : Lisa Wang/Manager

# TABLE OF CONTENTS

**1 TEST RESULT CERTIFICATION ..... 2**

**2 EUT TECHNICAL DESCRIPTION ..... 4**

**3 SUMMARY OF TEST RESULT ..... 6**

**4 TEST METHODOLOGY ..... 7**

4.1 GENERAL DESCRIPTION OF APPLIED STANDARDS ..... 7
4.2 MEASUREMENT EQUIPMENT USED ..... 7
4.3 DESCRIPTION OF TEST MODES ..... 8

**5 FACILITIES AND ACCREDITATIONS ..... 13**

5.1 FACILITIES ..... 13
5.2 LABORATORY ACCREDITATIONS AND LISTINGS ..... 13

**6 TEST SYSTEM UNCERTAINTY ..... 14**

**7 SETUP OF EQUIPMENT UNDER TEST ..... 15**

7.1 RADIO FREQUENCY TEST SETUP ..... 15
7.2 RADIO FREQUENCY TEST SETUP ..... 15
7.3 CONDUCTED EMISSION TEST SETUP ..... 17
7.4 BLOCK DIAGRAM CONFIGURATION OF TEST SYSTEM ..... 18
7.5 SUPPORT EQUIPMENT ..... 18

**8 TEST REQUIREMENTS ..... 19**

8.1 BANDWIDTH MEASUREMENT ..... 19
8.2 MAXIMUM CONDUCTED OUTPUT POWER ..... 96
8.3 MAXIMUM PEAK POWER DENSITY ..... 101
8.4 FREQUENCY STABILITY ..... 165
8.5 UNDESIRABLE RADIATED SPURIOUS EMISSION ..... 188
8.6 POWER LINE CONDUCTED EMISSIONS ..... 231
8.7 ANTENNA APPLICATION ..... 236

# 2 EUT TECHNICAL DESCRIPTION

| Characteristics | Description |
|---|---|
| **IEEE 802.11 WLAN Mode Supported** | ☒802.11a(20MHz channel bandwidth)<br>☒802.11b(20MHz channel bandwidth)<br>☒802.11g(20MHz channel bandwidth)<br>☒802.11n(20MHz channel bandwidth)<br>☒802.11n(40MHz channel bandwidth)<br>☒802.11ac(20MHz channel bandwidth)<br>☒802.11ac(40MHz channel bandwidth)<br>☒802.11ac(80MHz channel bandwidth) |
| **Data Rate** | WIFI:<br>802.11 b:1,2,5.5,11Mbps;<br>802.11 g/a:6,9,12,18,24,36,48,54Mbps;<br>802.11n(HT20)/ac(HT20): MCS0-MCS7;<br>802.11n(HT40): MCS0-MCS7;<br>802.11ac(HT40):MCS0-MCS8;<br>802.11ac(VHT80):MCS0-MCS8;<br>Bluetooth DSS:<br>1Mbps for GFSK modulation<br>2Mbps for pi/4-DQPSK modulation<br>3Mbps for 8DPSK modulation<br>Bluetooth DTS:<br>1Mbps for GFSK modulation |
| **Modulation** | WIFI:<br>OFDM with BPSK/QPSK/16QAM/64QAM for 802.11a/g/n;<br>DSSS with DBPSK/DQPSK/CCK for 802.11b;<br>BT DSS:<br>GFSK modulation (1Mbps)<br>pi/4-DQPSK modulation (2Mbps)<br>8DPSK modulation (3Mbps)<br>BT DTS:<br>GFSK modulation (1Mbps) |

**Operating Frequency Range**

| WIFI 5G Band | Mode | Frequency Range(MHz) | Number of channels |
|---|---|---|---|
| UNII Band I | 802.11a/n(HT20)/ac(VHT20) | 5180-5240 | 4 |
| | 802.11n(HT40)/ac(VHT40) | 5190-5230 | 2 |
| | 802.11 ac(VHT80) | 5210 | 1 |
| UNII Band II-A | 802.11a/n(HT20)/ac(VHT20) | 5260-5320 | 4 |
| | 802.11n(HT40)/ac(VHT40) | 5270-5310 | 2 |
| | 802.11 ac(VHT80) | 5290 | 1 |
| UNII Band II-C | 802.11a/n(HT20)/ac(VHT20) | 5500-5700 | 11 |
| | 802.11n(HT40)/ac(VHT40) | 5510-5670 | 5 |
| | 802.11 ac(VHT80) | 5530-5610 | 2 |
| UNII Band III | 802.11a/n(HT20)/ac(VHT20) | 5745-5825 | 5 |
| | 802.11n(HT40)/ac(VHT40) | 5755-5795 | 2 |
| | 802.11 ac(VHT80) | 5775 | 1 |

| | |
|---|---|
| | 2.4G WIFI:<br>2412-2462MHz for 802.11b/g;<br>2412-2462MHz for 802.11n(HT20);<br>2422-2452MHz for 802.11n(HT40);<br>Bluetooth: 2402-2480MHz |
| **Transmit Power Max** | 16.48 dBm for WIFI 2.4G Band;<br>1.784 dBm for BT DSS;<br>3.994 dBm for BT DTS;<br>13.80 dBm for UNII Band I;<br>13.34 dBm for UNII Band II-A;<br>14.04 dBm for UNII Band II-C;<br>12.35 dBm for UNII Band III |
| **Antenna Type** | FPC Antenna<br>Two antenna for WIFI<br>A antenna for BT |
| **Smart system** | ☒SISO ☐MIMO |
| **Antenna Gain** | 2dBi for WIFI 2.4G Band<br>2dBi for BT<br>2dBi for WIFI 5G Band |
| **Power supply** | ☒DC supply: DC supply: DC 7.4V by lithium battery or DC 12V by adapter |
| | ☒Adapter supply:<br>Adapter 1:<br>Model: ADS-25FSG-12 12024EPCU<br>Input: AC 100-240V, 50/60Hz 0.7A<br>Output: DC 12V 2A<br>Adapter 2:<br>Model: KSASB0241200200VU<br>Input: AC 100-240V, 50/60Hz 0.6A<br>Output: DC 12V 2A |

***Note:*** *for more details, please refer to the User's manual of the EUT.*

# 3 SUMMARY OF TEST RESULT

| FCC Part Clause | Test Parameter | Verdict | Remark |
|---|---|---|---|
| 15.407 (a)<br>15.407 (e) | 99% , 6dB and 26dB Bandwidth | PASS | |
| 15.407 (a) | Maximum Conducted Output Power | PASS | |
| 15.407 (a) | Peak Power Spectral Density | PASS | |
| 15.407 (b) | Radiated Spurious Emission | PASS | |
| 15.407(g) | Frequency Stability | PASS | |
| 15.407 (b)(6)<br>15.207 | Power Line Conducted Emission | PASS | |
| 15.407(a)<br>15.203 | Antenna Application | PASS | |
| NOTE1: N/A (Not Applicable)<br>NOTE2: According to FCC OET KDB 789003 D2 General UNII Test Procedures New Rules v01r02, In addition, the radiated test is also performed to ensure the emissions emanating from the device cabinet also comply with the applicable limits. | | | |

RELATED SUBMITTAL(S) / GRANT(S):

This submittal(s) (test report) is intended for FCC ID: S7JM1220KWP filing to comply with Section 15.247 of the FCC Part 15, Subpart E Rules.

# 4 TEST METHODOLOGY

## 4.1 GENERAL DESCRIPTION OF APPLIED STANDARDS

According to its specifications, the EUT must comply with the requirements of the following standards:
FCC 47 CFR Part 2, Subpart J
FCC 47 CFR Part 15, Subpart E
FCC KDB 789003 D2 General UNII Test Procedures New Rules v01r02
FCC KDB 662911 D01 Multiple Transmitter Output v02r01
FCC KDB 662911 D02 MIMO With Cross Polarized Antenna V01

## 4.2 MEASUREMENT EQUIPMENT USED

4.2.1 Conducted Emission Test Equipment

| EQUIPMENT TYPE | MFR | MODEL NUMBER | SERIAL NUMBER | LAST CAL. | DUE CAL. |
|---|---|---|---|---|---|
| Test Receiver | Rohde & Schwarz | ESCS30 | 828985/018 | 05/28/2016 | 05/28/2017 |
| L.I.S.N. | Schwarzbeck | NNLK8129 | 8129203 | 05/28/2016 | 05/28/2017 |
| 50Ω Coaxial Switch | Anritsu | MP59B | M20531 | N/A | 05/28/2017 |
| Pulse Limiter | Rohde & Schwarz | ESH3-Z2 | 100006 | 05/28/2016 | 05/28/2017 |
| Voltage Probe | Rohde & Schwarz | TK9416 | N/A | 05/28/2016 | 05/28/2017 |
| I.S.N | Rohde & Schwarz | ENY22 | 1109.9508.02 | 05/28/2016 | 05/28/2017 |

*4.2.2* Radiated Emission Test Equipment

| EQUIPMENT TYPE | MFR | MODEL NUMBER | SERIAL NUMBER | LAST CAL. | DUE CAL. |
|---|---|---|---|---|---|
| EMI Test Receiver | Rohde & Schwarz | ESU | 1302.6005.26 | 05/28/2016 | 05/28/2017 |
| Pre-Amplifier | HP | 8447D | 2944A07999 | 05/28/2016 | 05/28/2017 |
| Bilog Antenna | Schwarzbeck | VULB9163 | 142 | 05/28/2016 | 05/28/2017 |
| Loop Antenna | ARA | PLA-1030/B | 1029 | 05/28/2016 | 05/28/2017 |
| Horn Antenna | Schwarzbeck | BBHA 9170 | BBHA9170399 | 05/28/2016 | 05/28/2017 |
| Horn Antenna | Schwarzbeck | BBHA 9120 | D143 | 05/28/2016 | 05/28/2017 |
| Cable | Schwarzbeck | AK9513 | ACRX1 | 05/28/2016 | 05/28/2017 |
| Cable | Rosenberger | N/A | FP2RX2 | 05/28/2016 | 05/28/2017 |
| Cable | Schwarzbeck | AK9513 | CRPX1 | 05/28/2016 | 05/28/2017 |
| Cable | Schwarzbeck | AK9513 | CRRX2 | 05/28/2016 | 05/28/2017 |

4.2.3 Radio Frequency Test Equipment

| EQUIPMENT TYPE | MFR | MODEL NUMBER | SERIAL NUMBER | LAST CAL. | DUE CAL. |
|---|---|---|---|---|---|
| Spectrum Analyzer | Agilent | E4407B | 88156318 | 05/28/2016 | 05/28/2017 |
| Power meter | Anritsu | ML2495A | 0824006 | 05/28/2016 | 05/28/2017 |
| Power sensor | Anritsu | MA2411B | 0738172 | 05/28/2016 | 05/28/2017 |
| Spectrum Analyzer | Agilent | N9010A | My53470879 | 05/28/2016 | 05/28/2017 |
| Spectrum Analyzer | Rohde & Schwarz | FSV40 | 100967 | 05/28/2016 | 05/28/2017 |

***Remark:*** *Each piece of equipment is scheduled for calibration once a year.*

## 4.3 DESCRIPTION OF TEST MODES

The EUT has been tested under its typical operating condition.
The EUT configuration for testing is installed on RF field strength measurement to meet the Commissions requirement and operating in a manner which intends to maximize its emission characteristics in a continuous normal application.

The Transmitter was operated in the normal operating mode. The TX frequency was fixed which was for the purpose of the measurements.

Test of channel included the lowest and middle and highest frequency to perform the test, then record on this report.

Those data rates (☒802.11a: 6 Mbps; ☒802.11n (HT20): MCS0; ☒802.11n (HT20): MCS15; ☒802.11n (HT40): MCS0; ☒802.11n (HT40): MCS15; ☒802.11ac (HT20): MCS0; ☒802.11ac (HT20): MCS15; ☒ 802.11ac (HT40): MCS0; ☒802.11ac (HT40): MCS19; ☒802.11ac (HT80): MCS0; ☒802.11ac (HT80): MCS19;) were used for all test.

Pre-defined engineering program for regulatory testing used to control the EUT for staying in continuous transmitting and receiving mode is programmed.

☒Wifi 5G with UNII Band I

Frequency and Channel list for 802.11a/n(HT20)/ac(VHT20):

| Channel | Frequency (MHz) | Channel | Frequency (MHz) | Channel | Frequency (MHz) |
|---|---|---|---|---|---|
| 36 | 5180 | 44 | 5220 | | |
| 40 | 5200 | 48 | 5240 | | |

Frequency and Channel list for 802.11n(HT40)/ac(VHT40):

| Channel | Frequency (MHz) | Channel | Frequency (MHz) | Channel | Frequency (MHz) |
|---|---|---|---|---|---|
| 38 | 5190 | | | | |
| 46 | 5230 | | | | |

Frequency and Channel list for 802.11ac(VHT80):

| Channel | Frequency (MHz) | Channel | Frequency (MHz) | Channel | Frequency (MHz) |
|---|---|---|---|---|---|
| 42 | 5210 | | | | |
| | | | | | |

Test Frequency and Channel for 802.11a/n(HT20)/ac(VHT20):

| Lowest Frequency | | Middle Frequency | | Highest Frequency | |
|---|---|---|---|---|---|
| Channel | Frequency (MHz) | Channel | Frequency (MHz) | Channel | Frequency (MHz) |
| 36 | 5180 | 40 | 5200 | 48 | 5240 |

Test Frequency and channel for 802.11n(VHT40)/ac(VHT40):

| Lowest Frequency | | Middle Frequency | | Highest Frequency | |
|---|---|---|---|---|---|
| Channel | Frequency (MHz) | Channel | Frequency (MHz) | Channel | Frequency (MHz) |
| 38 | 5190 | N/A | N/A | 46 | 5230 |

Test Frequency and channel for 802.11ac(HT80):

| Lowest Frequency | | Middle Frequency | | Highest Frequency | |
|---|---|---|---|---|---|
| Channel | Frequency (MHz) | Channel | Frequency (MHz) | Channel | Frequency (MHz) |
| 42 | 5210 | N/A | N/A | N/A | N/A |

☒Wifi 5G with UNII Band II-A

Frequency and Channel list for 802.11a/n(HT20)/ac(VHT20):

| Channel | Frequency (MHz) | Channel | Frequency (MHz) | Channel | Frequency (MHz) |
|---|---|---|---|---|---|
| 52 | 5260 | 60 | 5300 | | |
| 56 | 5280 | 64 | 5320 | | |

Frequency and Channel list for 802.11n(VHT40)/ac(VHT40):

| Channel | Frequency (MHz) | Channel | Frequency (MHz) | Channel | Frequency (MHz) |
|---|---|---|---|---|---|
| 54 | 5270 | | | | |
| 62 | 5310 | | | | |

Frequency and Channel list for 802.11ac(VHT80):

| Channel | Frequency (MHz) | Channel | Frequency (MHz) | Channel | Frequency (MHz) |
|---|---|---|---|---|---|
| 58 | 5290 | | | | |
| | | | | | |

Test Frequency and Channel for 802.11a/n(HT20)/ac(VHT20):

| Lowest Frequency | | Middle Frequency | | Highest Frequency | |
|---|---|---|---|---|---|
| Channel | Frequency (MHz) | Channel | Frequency (MHz) | Channel | Frequency (MHz) |
| 52 | 5260 | 56 | 5280 | 64 | 5320 |

Test Frequency and channel for 802.11n(HT40)/ac(VHT40):

| Lowest Frequency | | Middle Frequency | | Highest Frequency | |
|---|---|---|---|---|---|
| Channel | Frequency (MHz) | Channel | Frequency (MHz) | Channel | Frequency (MHz) |
| 54 | 5270 | N/A | N/A | 62 | 5310 |

Test Frequency and channel for 802.11ac(VHT80):

| Lowest Frequency | | Middle Frequency | | Highest Frequency | |
|---|---|---|---|---|---|
| Channel | Frequency (MHz) | Channel | Frequency (MHz) | Channel | Frequency (MHz) |
| 58 | 5290 | N/A | N/A | N/A | N/A |

☒Wifi 5G with UNII Band II-C

Frequency and Channel list for 802.11a/n(HT20)/ac(VHT20):

| Channel | Frequency (MHz) | Channel | Frequency (MHz) | Channel | Frequency (MHz) |
|---|---|---|---|---|---|
| 100 | 5500 | 116 | 5580 | 132 | 5660 |
| 104 | 5520 | 120 | 5600 | 136 | 5680 |
| 108 | 5540 | 124 | 5620 | 140 | 5700 |
| 112 | 5560 | 128 | 5640 | | |

Frequency and Channel list for 802.11n(VHT40)/ac(VHT40):

| Channel | Frequency (MHz) | Channel | Frequency (MHz) | Channel | Frequency (MHz) |
|---|---|---|---|---|---|
| 102 | 5510 | 126 | 5630 | | |
| 110 | 5550 | 134 | 5670 | | |
| 118 | 5590 | | | | |

Frequency and Channel list for 802.11ac(VHT80):

| Channel | Frequency (MHz) | Channel | Frequency (MHz) | Channel | Frequency (MHz) |
|---|---|---|---|---|---|
| 106 | 5530 | | | | |
| 122 | 5610 | | | | |

Test Frequency and Channel for 802.11a/n(HT20)/ac(VHT20):

| Lowest Frequency | | Middle Frequency | | Highest Frequency | |
|---|---|---|---|---|---|
| Channel | Frequency (MHz) | Channel | Frequency (MHz) | Channel | Frequency (MHz) |
| 100 | 5500 | 120 | 5600 | 140 | 5700 |

Test Frequency and channel for 802.11n(VHT40)/ac(VHT40):

| Lowest Frequency | | Middle Frequency | | Highest Frequency | |
|---|---|---|---|---|---|
| Channel | Frequency (MHz) | Channel | Frequency (MHz) | Channel | Frequency (MHz) |
| 102 | 5510 | 118 | 5590 | 134 | 5670 |

Test Frequency and channel for 802.11ac(VHT80):

| Lowest Frequency | | Middle Frequency | | Highest Frequency | |
|---|---|---|---|---|---|
| Channel | Frequency (MHz) | Channel | Frequency (MHz) | Channel | Frequency (MHz) |
| 106 | 5530 | N/A | N/A | 122 | 5610 |

☒ Wifi 5G with UNII Band III

Frequency and Channel list for 802.11a/n(HT20)/ac(VHT20):

| Channel | Frequency (MHz) | Channel | Frequency (MHz) | Channel | Frequency (MHz) |
|---|---|---|---|---|---|
| 149 | 5745 | 157 | 5785 | 165 | 5825 |
| 153 | 5765 | 161 | 5805 | | |

Frequency and Channel list for 802.11n(HT40)/ac(VHT40):

| Channel | Frequency (MHz) | Channel | Frequency (MHz) | Channel | Frequency (MHz) |
|---|---|---|---|---|---|
| 151 | 5755 | | | | |
| 159 | 5795 | | | | |

Frequency and Channel list for 802.11ac(VHT80):

| Channel | Frequency (MHz) | Channel | Frequency (MHz) | Channel | Frequency (MHz) |
|---|---|---|---|---|---|
| 155 | 5775 | | | | |

Test Frequency and Channel for 802.11a/n(HT20)/ac(VHT20):

| Lowest Frequency | | Middle Frequency | | Highest Frequency | |
|---|---|---|---|---|---|
| Channel | Frequency (MHz) | Channel | Frequency (MHz) | Channel | Frequency (MHz) |
| 149 | 5745 | 157 | 5785 | 165 | 5825 |

Test Frequency and channel for 802.11n(HT40)/ac(VHT40):

| Lowest Frequency | | Middle Frequency | | Highest Frequency | |
|---|---|---|---|---|---|
| Channel | Frequency (MHz) | Channel | Frequency (MHz) | Channel | Frequency (MHz) |
| 151 | 5755 | N/A | N/A | 159 | 5795 |

Test Frequency and channel for 802.11ac(VHT80):

| Lowest Frequency | | Middle Frequency | | Highest Frequency | |
|---|---|---|---|---|---|
| Channel | Frequency (MHz) | Channel | Frequency (MHz) | Channel | Frequency (MHz) |
| 155 | 5775 | | | | |

# 5 FACILITIES AND ACCREDITATIONS

## 5.1 FACILITIES

All measurement facilities used to collect the measurement data are located at

Bldg 69, Majialong Industry Zone District, Nanshan District, Shenzhen, China
The sites are constructed in conformance with the requirements of ANSI C63.7, ANSI C63.10 and CISPR Publication 22.

## 5.2 LABORATORY ACCREDITATIONS AND LISTINGS

| Site Description | | |
|---|---|---|
| EMC Lab. | : | Accredited by CNAS,2016.10.24<br>The certificate is valid until 2022.10.28<br>The Laboratory has been assessed and proved to be in compliance with CNAS-CL01:2006 (identical to ISO/IEC 17025:2005)<br>The Certificate Registration Number is L2291.<br><br>Accredited by TUV Rheinland Shenzhen 2015.4<br>The Laboratory has been assessed according to the requirements ISO/IEC 17025.<br><br>Accredited by FCC, July 06, 2016<br>The Certificate Registration Number is 709623.<br><br>Accredited by FCC, July 06, 2016<br>The Certificate Registration Number is 406365.<br><br>Accredited by Industry Canada, November 29, 2012<br>The Certificate Registration Number is 4480A. |
| Name of Firm | : | EMTEK(SHENZHEN) CO., LTD. |
| Site Location | : | Bldg 69, Majialong Industry Zone,<br>Nanshan District, Shenzhen, Guangdong, China |

# 6 TEST SYSTEM UNCERTAINTY

The following measurement uncertainty levels have been estimated for tests performed on the apparatus:

| Parameter | Uncertainty |
|---|---|
| Radio Frequency | ±1x10^-5 |
| Maximum Peak Output Power Test | ±1.0dB |
| Conducted Emissions Test | ±2.0dB |
| Radiated Emission Test | ±2.0dB |
| Power Density | ±2.0dB |
| Occupied Bandwidth Test | ±1.0dB |
| Band Edge Test | ±3dB |
| All emission, radiated | ±3dB |
| Antenna Port Emission | ±3dB |
| Temperature | ±0.5℃ |
| Humidity | ±3% |

Measurement Uncertainty for a level of Confidence of 95%

# 7 SETUP OF EQUIPMENT UNDER TEST

## 7.1 RADIO FREQUENCY TEST SETUP

The WLAN component's antenna ports(s) of the EUT are connected to the measurement instrument per an appropriate attenuator. The EUT is controlled by PC/software to emit the specified signals for the purpose of measurements.

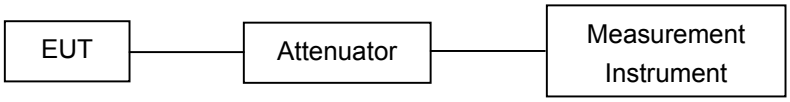


## 7.2 RADIO FREQUENCY TEST SETUP

The test site semi-anechoic chamber has met the requirement of NSA tolerance 4 dB according to the standards: ANSI C63.10. The test distance is 3m.The setup is according to the requirements in Section 13.1.4.1 of ANSI C63.10-2013 and CAN/CSA-CEI/IEC CISPR 22.

Below 30MHz：
The EUT is placed on a turntable 0.8 meters above the ground in the chamber, 3 meter away from the antenna (loop antenna). The Antenna should be positioned with its plane vertical at the specified distance from the EUT and rotated about its vertical axis for maximum response at each azimuth about the EUT. The center of the loop shall be 1 m above the ground. For certain applications, the loop antenna plane may also need to be positioned horizontally at the specified distance from the EUT.

Above 30MHz：
The EUT is placed on a turntable 0.8 meters above the ground in the chamber, 3 meter away from the antenna. The maximal emission value is acquired by adjusting the antenna height, polarisation and turntable azimuth. Normally, the height range of antenna is 1 m to 4 m, the azimuth range of turntable is 0° to 360°, and the receive antenna has two polarizations Vertical (V) and Horizontal (H).

Above 1GHz：
(Note: the FCC's permission to use 1.5m as an alternative per TCBC Conf call of Dec. 2, 2014.)
The EUT is placed on a turntable 1.5 meters above the ground in the chamber, 3 meter away from the antenna. The maximal emission value is acquired by adjusting the antenna height, polarisation and turntable azimuth. Normally, the height range of antenna is 1 m to 4 m, the azimuth range of turntable is 0° to 360°, and the receive antenna has two polarizations Vertical (V) and Horizontal (H).

(a) Radiated Emission Test Set-Up, Frequency Below 30MHz

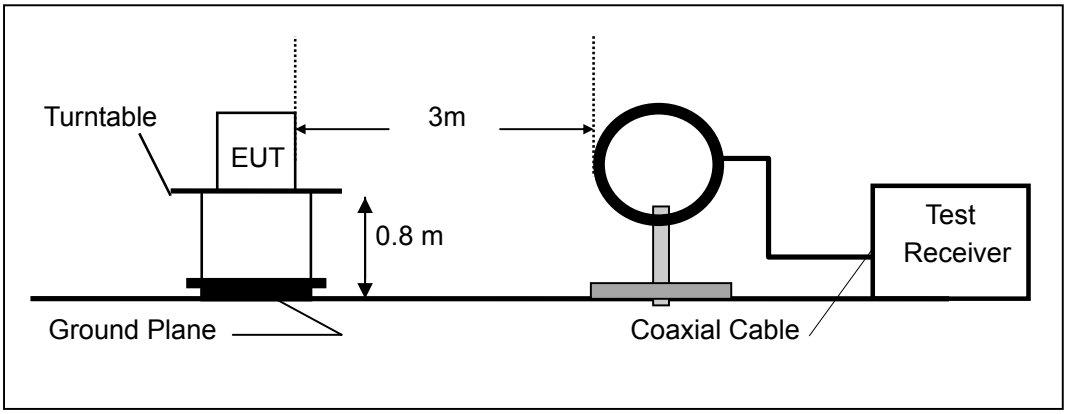

(b) Radiated Emission Test Set-Up, Frequency Below 1000MHz

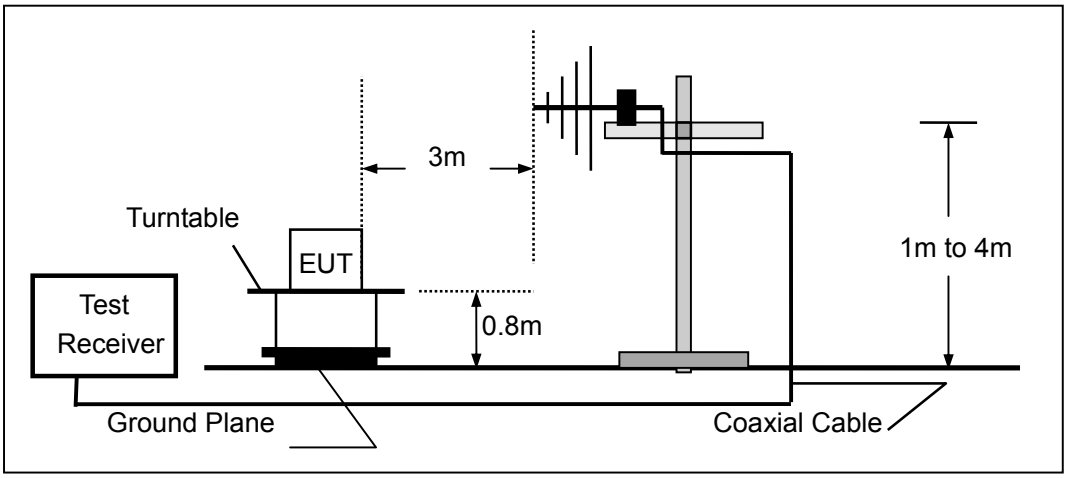


(c) Radiated Emission Test Set-Up, Frequency above 1000MHz

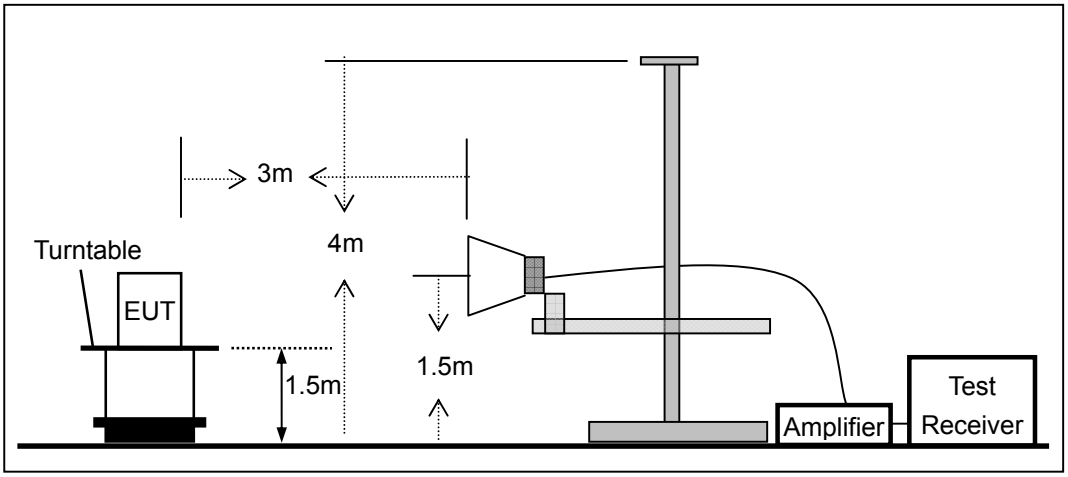

## 7.3 CONDUCTED EMISSION TEST SETUP

The mains cable of the EUT (maybe per AC/DC Adapter) must be connected to LISN. The LISN shall be placed 0.8 m from the boundary of EUT and bonded to a ground reference plane for LISN mounted on top of the ground reference plane. This distance is between the closest points of the LISN and the EUT. All other units of the EUT and associated equipment shall be at least 0.8m from the LISN.

Ground connections, where required for safety purposes, shall be connected to the reference ground point of the LISN and, where not otherwise provided or specified by the manufacturer, shall be of same length as the mains cable and run parallel to the mains connection at a separation distance of not more than 0.1 m.

According to the requirements in Section 13.1.4.1 of ANSI C63.10-2013 Conducted emissions from the EUT measured in the frequency range between 0.15 MHz and 30 MHz using CISPR Quasi-Peak and average detector mode.

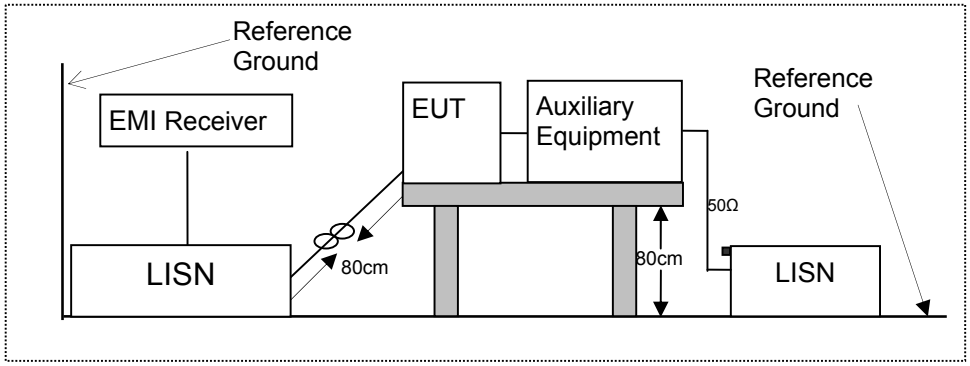

## 7.4 BLOCK DIAGRAM CONFIGURATION OF TEST SYSTEM

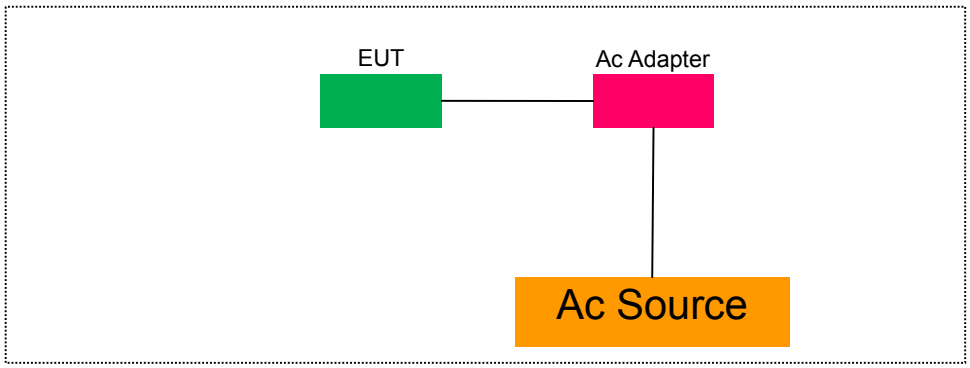


## 7.5 SUPPORT EQUIPMENT

| Item | Equipment | Mfr/Brand | Model/Type No. | FCC ID | Series No. | Note |
|---|---|---|---|---|---|---|
| N/A | N/A | N/A | N/A | N/A | N/A | N/A |

***Notes:***

1. *All the equipment/cables were placed in the worst-case configuration to maximize the emission during the test.*
2. *Grounding was established in accordance with the manufacturer's requirements and conditions for the intended use.*

# 8 TEST REQUIREMENTS

## 8.1 BANDWIDTH MEASUREMENT

### 8.1.1 Applicable Standard

According to FCC Part 15.407(a)(1) for UNII Band I
According to FCC Part 15.407(a)(2) for UNII Band II-A and UNII Band II-C
According to FCC Part 15.407(a)(3) for UNII Band III
According to FCC Part 15.407(e) for UNII Band III
According to 789033 D02 Section II(C)
According to 789033 D02 Section II(D)

### 8.1.2 Conformance Limit

No limit requirement.
The minimum 6 dB emission bandwidth of at least 500 KHz for the UNII Band III.

### 8.1.3 Test Configuration

Test according to clause 6.1 radio frequency test setup

### 8.1.4 Test Procedure

Connect the antenna port(s) to the spectrum analyzer input. Using the spectrum analyzer Channel Bandwidth mode, configure the spectrum analyzer as shown below

- The following procedure shall be used for measuring (26 dB) power bandwidth:

Center Frequency: test Frequency
Set RBW = approximately 1% of the emission bandwidth.
Set the VBW > RBW.
Detector = Peak.
Trace mode = max hold.
X dB Bandwidth: 26 dB
Measure the maximum width of the emission that is 26 dB down from the maximum of the emission. Compare this with the RBW setting of the analyzer. Readjust RBW and repeat measurement as needed until the RBW/EBW ratio is approximately 1%.

- Minimum Emission Bandwidth for the UNII Band III

Center Frequency: test Frequency
Set RBW = 100 kHz
Set VBW ≥ 3 · RBW
Detector = Peak
Trace mode = max hold
Sweep = auto couple
X dB Bandwidth: 6 dB
Note: The automatic bandwidth measurement capability of a spectrum analyzer or EMI receiver may be employed if it implements the functionality described above.

- The following procedure shall be used for measuring (99 %) power bandwidth:

Set center frequency to the nominal EUT channel center frequency.
Set span = 1.5 times to 5.0 times the OBW.
Set RBW = 1 % to 5 % of the OBW
Set VBW ≥ 3 · RBW
Video averaging is not permitted. Where practical, a sample detection and single sweep mode shall be used. Otherwise, peak detection and max hold mode (until the trace stabilizes) shall be used.
Use the 99 % power bandwidth function of the instrument (if available).
If the instrument does not have a 99 % power bandwidth function, the trace data points are recovered and directly summed in power units. The recovered amplitude data points, beginning at the lowest frequency, are placed in a running sum until 0.5 % of the total is reached; that frequency is recorded as the lower frequency. The process is repeated until 99.5 % of the total is reached; that frequency is recorded as the upper frequency. The 99% occupied bandwidth is the difference between these two frequencies.

8.1.5 Test Results

| ☒ 802.11a mode | | | |
|---|---|---|---|
| Temperature : | 28℃ | Test Date : | March 31, 2017 |
| Humidity : | 65 % | Test By: | King Kong |

| Band | Channel Number | Channel Freq. (MHz) | 26dB EBW | | 99% OBW | | Limit (MHz) | Verdict |
|---|---|---|---|---|---|---|---|---|
| | | | Ant0 | Ant1 | Ant0 | Ant1 | | |
| UNII Band I | CH36 | 5180 | 26.59 | 26.46 | 16.888 | 17.020 | N/A | N/A |
| | CH40 | 5200 | 28.44 | 25.21 | 16.969 | 16.896 | N/A | N/A |
| | CH48 | 5240 | 35.87 | 35.91 | 18.553 | 18.584 | N/A | N/A |
| UNII Band II-A | CH52 | 5260 | 37.35 | 36.82 | 20.068 | 20.084 | N/A | N/A |
| | CH56 | 5280 | 38.21 | 28.21 | 21.599 | 21.350 | N/A | N/A |
| | CH64 | 5320 | 38.71 | 38.03 | 22.996 | 22.844 | N/A | N/A |
| UNII Band II-C | CH100 | 5500 | 38.44 | 37.05 | 22.676 | 22.407 | N/A | N/A |
| | CH120 | 5600 | 34.38 | 34.39 | 20.376 | 20.081 | N/A | N/A |
| | CH140 | 5700 | 33.53 | 34.14 | 20.550 | 20.563 | N/A | N/A |
| UNII Band III | CH149 | 5745 | 33.45 | 31.93 | 20.140 | 19.721 | N/A | N/A |
| | CH157 | 5785 | 32.21 | 32.21 | 20.074 | 19.895 | N/A | N/A |
| | CH165 | 5825 | 32.79 | 32.78 | 19.248 | 19.147 | N/A | N/A |
| Note:<br>N/A (Not Applicable) | | | | | | | | |

| ☒ 802.11n(VHT20) mode | | | |
|---|---|---|---|
| Temperature : | 28℃ | Test Date : | March 31, 2017 |
| Humidity : | 65 % | Test By: | King Kong |

| Band | Channel Number | Channel Freq. (MHz) | 26dB EBW | | 99% OBW | | Limit (MHz) | Verdict |
|---|---|---|---|---|---|---|---|---|
| | | | Ant0 | Ant1 | Ant0 | Ant1 | | |
| UNII Band I | CH36 | 5180 | 30.30 | 30.30 | 17.894 | 17.887 | N/A | N/A |
| | CH40 | 5200 | 29.39 | 28.42 | 17.871 | 17.861 | N/A | N/A |
| | CH48 | 5240 | 26.16 | 24.01 | 17.830 | 17.810 | N/A | N/A |
| UNII Band II-A | CH52 | 5260 | 29.79 | 28.41 | 17.966 | 17.993 | N/A | N/A |
| | CH56 | 5280 | 32.87 | 34.12 | 18.466 | 18.432 | N/A | N/A |
| | CH64 | 5320 | 32.34 | 32.35 | 18.826 | 18.706 | N/A | N/A |
| UNII Band II-C | CH100 | 5500 | 32.60 | 32.70 | 19.430 | 18.877 | N/A | N/A |
| | CH120 | 5600 | 27.03 | 26.81 | 17.886 | 17.861 | N/A | N/A |
| | CH140 | 5700 | 25.41 | 25.70 | 17.820 | 17.798 | N/A | N/A |
| UNII Band III | CH149 | 5745 | 25.89 | 25.10 | 17.801 | 17.792 | N/A | N/A |
| | CH157 | 5785 | 25.48 | 24.90 | 17.735 | 17.731 | N/A | N/A |
| | CH165 | 5825 | 24.00 | 24.00 | 17.737 | 17.736 | N/A | N/A |
| Note:<br>N/A (Not Applicable) | | | | | | | | |

☒ 802.11ac(VHT20) mode

| | | | |
|---|---|---|---|
| Temperature : | 28℃ | Test Date : | March 31, 2017 |
| Humidity : | 65 % | Test By: | King Kong |

| Band | Channel Number | Channel Freq. (MHz) | 26dB EBW | | 99% OBW | | Limit (MHz) | Verdict |
|---|---|---|---|---|---|---|---|---|
| | | | Ant0 | Ant1 | Ant0 | Ant1 | | |
| UNII Band I | CH36 | 5180 | 30.91 | 30.90 | 17.984 | 17.948 | N/A | N/A |
| | CH40 | 5200 | 29.71 | 29.71 | 17.859 | 17.867 | N/A | N/A |
| | CH48 | 5240 | 26.30 | 25.50 | 17.879 | 17.855 | N/A | N/A |
| UNII Band II-A | CH52 | 5260 | 28.67 | 28.67 | 18.051 | 18.035 | N/A | N/A |
| | CH56 | 5280 | 32.21 | 30.93 | 18.170 | 18.150 | N/A | N/A |
| | CH64 | 5320 | 31.29 | 31.29 | 18.637 | 18.624 | N/A | N/A |
| UNII Band II-C | CH100 | 5500 | 32.64 | 31.54 | 18.646 | 18.574 | N/A | N/A |
| | CH120 | 5600 | 26.49 | 25.48 | 17.882 | 17.882 | N/A | N/A |
| | CH140 | 5700 | 25.76 | 25.32 | 17.793 | 17.791 | N/A | N/A |
| UNII Band III | CH149 | 5745 | 25.23 | 25.23 | 17.824 | 17.814 | N/A | N/A |
| | CH157 | 5785 | 24.40 | 24.40 | 17.794 | 17.739 | N/A | N/A |
| | CH165 | 5825 | 24.07 | 23.71 | 17.742 | 17.744 | N/A | N/A |

Note:
N/A (Not Applicable)

☒ 802.11n(VHT40) mode

| | | | |
|---|---|---|---|
| Temperature : | 28℃ | Test Date : | March 31, 2017 |
| Humidity : | 65 % | Test By: | King Kong |

| Band | Channel Number | Channel Freq. (MHz) | 26dB EBW | | 99% OBW | | Limit (MHz) | Verdict |
|---|---|---|---|---|---|---|---|---|
| | | | Ant0 | Ant1 | Ant0 | Ant1 | | |
| UNII Band I | CH38 | 5190 | 67.86 | 66.77 | 36.445 | 36.578 | N/A | N/A |
| | CH46 | 5230 | 70.42 | 70.41 | 36.480 | 36.455 | N/A | N/A |
| UNII Band II-A | CH54 | 5270 | 77.85 | 74.04 | 37.089 | 36.979 | N/A | N/A |
| | CH62 | 5310 | 73.11 | 72.26 | 37.354 | 37.289 | N/A | N/A |
| UNII Band II-C | CH102 | 5510 | 69.90 | 68.76 | 37.015 | 36.988 | N/A | N/A |
| | CH118 | 5590 | 51.61 | 51.41 | 36.558 | 36.496 | N/A | N/A |
| | CH134 | 5670 | 48.75 | 48.76 | 36.384 | 36.391 | N/A | N/A |
| UNII Band III | CH151 | 5755 | 47.02 | 47.93 | 36.389 | 36.385 | N/A | N/A |
| | CH159 | 5795 | 47.36 | 46.76 | 36.338 | 36.338 | N/A | N/A |

Note:
N/A (Not Applicable)

☒ 802.11ac(VHT40) mode

| | | | |
|---|---|---|---|
| Temperature : | 28℃ | Test Date : | March 31, 2017 |
| Humidity : | 65 % | Test By: | King Kong |

| Band | Channel Number | Channel Freq. (MHz) | 26dB EBW | | 99% OBW | | Limit (MHz) | Verdict |
|---|---|---|---|---|---|---|---|---|
| | | | Ant0 | Ant1 | Ant0 | Ant1 | | |
| UNII Band I | CH38 | 5190 | 73.36 | 73.28 | 36.576 | 36.551 | N/A | N/A |
| | CH46 | 5230 | 69.06 | 70.26 | 36.396 | 36.360 | N/A | N/A |
| UNII Band II-A | CH54 | 5270 | 73.33 | 73.33 | 36.766 | 36.652 | N/A | N/A |
| | CH62 | 5310 | 75.98 | 74.10 | 37.431 | 37.246 | N/A | N/A |
| UNII Band II-C | CH102 | 5510 | 68.02 | 65.09 | 37.186 | 37.005 | N/A | N/A |
| | CH118 | 5590 | 52.35 | 51.06 | 36.448 | 36.352 | N/A | N/A |
| | CH134 | 5670 | 47.20 | 47.16 | 36.302 | 36.268 | N/A | N/A |
| UNII Band III | CH151 | 5755 | 46.62 | 47.98 | 36.344 | 36.319 | N/A | N/A |
| | CH159 | 5795 | 44.48 | 44.24 | 36.247 | 36.197 | N/A | N/A |

Note:
N/A (Not Applicable)

☒ 802.11ac(VHT80) mode

| | | | |
|---|---|---|---|
| Temperature : | 28℃ | Test Date : | March 31, 2017 |
| Humidity : | 65 % | Test By: | King Kong |

| Band | Channel Number | Channel Freq. (MHz) | 26dB EBW | | 99% OBW | | Limit (MHz) | Verdict |
|---|---|---|---|---|---|---|---|---|
| | | | Ant0 | Ant1 | Ant0 | Ant1 | | |
| UNII Band I | CH42 | 5210 | 131.0 | 138.0 | 75.678 | 76.205 | N/A | N/A |
| UNII Band II-A | CH58 | 5290 | 139.0 | 139.0 | 76.297 | 76.210 | N/A | N/A |
| UNII Band II-C | CH106 | 5530 | 152.2 | 152.2 | 76.118 | 76.050 | N/A | N/A |
| | CH122 | 5610 | 158.8 | 158.8 | 76.097 | 75.970 | N/A | N/A |
| UNII Band III | CH155 | 5775 | 149.3 | 153.9 | 78.523 | 76.976 | N/A | N/A |

Note:
N/A (Not Applicable)

☒ UNII Band III

| | | | |
|---|---|---|---|
| Temperature : | 28℃ | Test Date : | March 31, 2017 |
| Humidity : | 65 % | Test By: | King Kong |

| Operation Mode | Channel Number | Channel Freq. (MHz) | 6dB EBW | | Limit (MHz) | Verdict |
|---|---|---|---|---|---|---|
| | | | Ant0 | Ant1 | | |
| 802.11a | CH149 | 5745 | 15.50 | 15.29 | 500 | PASS |
| | CH157 | 5785 | 15.15 | 15.14 | 500 | PASS |
| | CH165 | 5825 | 15.17 | 15.17 | 500 | PASS |
| 802.11n (VHT20) | CH149 | 5745 | 15.49 | 15.49 | 500 | PASS |
| | CH157 | 5785 | 15.16 | 15.17 | 500 | PASS |
| | CH165 | 5825 | 15.14 | 13.89 | 500 | PASS |
| 802.11ac (VHT20) | CH149 | 5745 | 15.10 | 14.95 | 500 | PASS |
| | CH157 | 5785 | 15.12 | 15.12 | 500 | PASS |
| | CH165 | 5825 | 15.01 | 13.79 | 500 | PASS |
| 802.11n (VHT40) | CH151 | 5755 | 35.14 | 35.14 | 500 | PASS |
| | CH159 | 5795 | 35.18 | 35.18 | 500 | PASS |
| 802.11ac (VHT40) | CH151 | 5755 | 35.15 | 35.14 | 500 | PASS |
| | CH159 | 5795 | 35.12 | 35.12 | 500 | PASS |
| 802.11ac (VHT80) | CH155 | 5775 | 75.21 | 75.21 | 500 | PASS |

Note:
N/A (Not Applicable)

| Emission Bandwidth&99% Occupied Bandwidth | | UNII Band I | |
|---|---|---|---|
| Test Model | 802.11a | Frequency(MHz) | 5180 |

Ant0

Ant1

| Emission Bandwidth&99% Occupied Bandwidth | | UNII Band I | |
|---|---|---|---|
| Test Model | 802.11a | Frequency(MHz) | 5200 |

Ant0

Ant1

| Emission Bandwidth&99% Occupied Bandwidth | | UNII Band I | |
|---|---|---|---|
| Test Model | 802.11a | Frequency(MHz) | 5240 |

Ant0

Ant1

| Emission Bandwidth&99% Occupied Bandwidth | | UNII Band II-A | |
|---|---|---|---|
| Test Model | 802.11a | Frequency(MHz) | 5260 |

Ant0

Ant1

| Emission Bandwidth&99% Occupied Bandwidth | | UNII Band II-A | |
|---|---|---|---|
| Test Model | 802.11a | Frequency(MHz) | 5280 |

Ant0

Ant1

| Emission Bandwidth&99% Occupied Bandwidth | | UNII Band II-A | |
|---|---|---|---|
| Test Model | 802.11a | Frequency(MHz) | 5320 |

Ant0

Ant1

| Emission Bandwidth&99% Occupied Bandwidth | | UNII Band II-C | |
|---|---|---|---|
| Test Model | 802.11a | Frequency(MHz) | 5500 |

Ant0

Ant1

| Emission Bandwidth&99% Occupied Bandwidth | | UNII Band II-C | |
|---|---|---|---|
| Test Model | 802.11a | Frequency(MHz) | 5600 |

Ant0

Ant1

| Emission Bandwidth&99% Occupied Bandwidth | | UNII Band II-C | |
|---|---|---|---|
| Test Model | 802.11a | Frequency(MHz) | 5700 |

Ant0

Ant1

| Emission Bandwidth&99% Occupied Bandwidth | | UNII Band III | |
|---|---|---|---|
| Test Model | 802.11a | Frequency(MHz) | 5745 |

Ant0

Ant1

| Emission Bandwidth&99% Occupied Bandwidth | | UNII Band III | |
|---|---|---|---|
| Test Model | 802.11a | Frequency(MHz) | 5785 |

Ant0

Ant1

| Emission Bandwidth&99% Occupied Bandwidth | | UNII Band III | |
|---|---|---|---|
| Test Model | 802.11a | Frequency(MHz) | 5825 |

Ant0

Ant1

| Emission Bandwidth&99% Occupied Bandwidth | | UNII Band I | |
|---|---|---|---|
| Test Model | 802.11n(VHT20) mode | Frequency(MHz) | 5180 |

Ant0

Ant1

| Emission Bandwidth&99% Occupied Bandwidth | | UNII Band I | |
|---|---|---|---|
| Test Model | 802.11n(VHT20) mode | Frequency(MHz) | 5200 |

Ant0

Ant1

| Emission Bandwidth&99% Occupied Bandwidth | | UNII Band I | |
|---|---|---|---|
| Test Model | 802.11n(VHT20) mode | Frequency(MHz) | 5240 |

Ant0

Ant1

| Emission Bandwidth&99% Occupied Bandwidth | | UNII Band II-A | |
|---|---|---|---|
| Test Model | 802.11n(VHT20) mode | Frequency(MHz) | 5260 |

Ant0

Ant1

| Emission Bandwidth&99% Occupied Bandwidth | | UNII Band II-A | |
|---|---|---|---|
| Test Model | 802.11n(VHT20) mode | Frequency(MHz) | 5280 |

Ant0

Ant1

| Emission Bandwidth&99% Occupied Bandwidth | | UNII Band II-A | |
|---|---|---|---|
| Test Model | 802.11n(VHT20) mode | Frequency(MHz) | 5320 |

Ant0

Ant1

| Emission Bandwidth&99% Occupied Bandwidth | | UNII Band II-C | |
|---|---|---|---|
| Test Model | 802.11n(VHT20) mode | Frequency(MHz) | 5500 |

Ant0

Ant1

| Emission Bandwidth&99% Occupied Bandwidth | | UNII Band II-C | |
|---|---|---|---|
| Test Model | 802.11n(VHT20) mode | Frequency(MHz) | 5600 |

Ant0

Ant1

| Emission Bandwidth&99% Occupied Bandwidth | | UNII Band II-C | |
|---|---|---|---|
| Test Model | 802.11n(VHT20) mode | Frequency(MHz) | 5700 |

Ant0

Ant1

| Emission Bandwidth&99% Occupied Bandwidth | | UNII Band III | |
|---|---|---|---|
| Test Model | 802.11n(VHT20) mode | Frequency(MHz) | 5745 |

Ant0

Ant1

| Emission Bandwidth&99% Occupied Bandwidth | | UNII Band III | |
|---|---|---|---|
| Test Model | 802.11n(VHT20) mode | Frequency(MHz) | 5785 |

Ant0

Ant1

| Emission Bandwidth&99% Occupied Bandwidth | | UNII Band III | |
|---|---|---|---|
| Test Model | 802.11n(VHT20) mode | Frequency(MHz) | 5825 |

Ant0

Ant1

| Emission Bandwidth&99% Occupied Bandwidth | | UNII Band I | |
|---|---|---|---|
| Test Model | 802.11ac(VHT20) mode | Frequency(MHz) | 5180 |

Ant0

Ant1

| Emission Bandwidth&99% Occupied Bandwidth | | UNII Band I | |
|---|---|---|---|
| Test Model | 802.11ac(VHT20) mode | Frequency(MHz) | 5200 |

Ant0

Ant1

| Emission Bandwidth&99% Occupied Bandwidth | | UNII Band I | |
|---|---|---|---|
| Test Model | 802.11ac(VHT20) mode | Frequency(MHz) | 5240 |

Ant0

Ant1

| Emission Bandwidth&99% Occupied Bandwidth | | UNII Band II-A | |
|---|---|---|---|
| Test Model | 802.11ac(VHT20) mode | Frequency(MHz) | 5260 |

Ant0

Ant1

| Emission Bandwidth&99% Occupied Bandwidth | | UNII Band II-A | |
|---|---|---|---|
| Test Model | 802.11ac(VHT20) mode | Frequency(MHz) | 5280 |

Ant0

Ant1

| Emission Bandwidth&99% Occupied Bandwidth | | UNII Band II-A | |
|---|---|---|---|
| Test Model | 802.11ac(VHT20) mode | Frequency(MHz) | 5320 |

Ant0

Ant1

| Emission Bandwidth&99% Occupied Bandwidth | | UNII Band II-C | |
|---|---|---|---|
| Test Model | 802.11ac(VHT20) mode | Frequency(MHz) | 5500 |

Ant0

Ant1

| Emission Bandwidth&99% Occupied Bandwidth | | UNII Band II-C | |
|---|---|---|---|
| Test Model | 802.11ac(VHT20) mode | Frequency(MHz) | 5600 |

Ant0

Ant1

| Emission Bandwidth&99% Occupied Bandwidth | | UNII Band II-C | |
|---|---|---|---|
| Test Model | 802.11ac(VHT20) mode | Frequency(MHz) | 5700 |

Ant0

Ant1

| Emission Bandwidth&99% Occupied Bandwidth | | UNII Band III | |
|---|---|---|---|
| Test Model | 802.11ac(VHT20) mode | Frequency(MHz) | 5745 |

Ant0

Ant1

| Emission Bandwidth&99% Occupied Bandwidth | | UNII Band III | |
|---|---|---|---|
| Test Model | 802.11ac(VHT20) mode | Frequency(MHz) | 5785 |

Ant0

Ant1

| Emission Bandwidth&99% Occupied Bandwidth | | UNII Band III | |
|---|---|---|---|
| Test Model | 802.11ac(VHT20) mode | Frequency(MHz) | 5825 |

Ant0

Ant1

| Emission Bandwidth&99% Occupied Bandwidth | | UNII Band I | |
|---|---|---|---|
| Test Model | 802.11n(VHT40) mode | Frequency(MHz) | 5190 |

Ant0

Ant1

| Emission Bandwidth&99% Occupied Bandwidth | | UNII Band I | |
|---|---|---|---|
| Test Model | 802.11n(VHT40) mode | Frequency(MHz) | 5230 |

Ant0

Ant1

| Emission Bandwidth&99% Occupied Bandwidth | | UNII Band II-A | |
|---|---|---|---|
| Test Model | 802.11n(VHT40) mode | Frequency(MHz) | 5270 |

Ant0

Ant1

| Emission Bandwidth&99% Occupied Bandwidth | | UNII Band II-A | |
|---|---|---|---|
| Test Model | 802.11n(VHT40) mode | Frequency(MHz) | 5310 |

Ant0

Ant1

| Emission Bandwidth&99% Occupied Bandwidth | | UNII Band II-C | |
|---|---|---|---|
| Test Model | 802.11n(VHT40) mode | Frequency(MHz) | 5510 |

Ant0

Ant1

| Emission Bandwidth&99% Occupied Bandwidth | | UNII Band II-C | |
|---|---|---|---|
| Test Model | 802.11n(VHT40) mode | Frequency(MHz) | 5590 |

Ant0

Ant1

| Emission Bandwidth&99% Occupied Bandwidth | | UNII Band II-C | |
|---|---|---|---|
| Test Model | 802.11n(VHT40) mode | Frequency(MHz) | 5670 |

Ant0

Ant1

| Emission Bandwidth&99% Occupied Bandwidth | | UNII Band III | |
|---|---|---|---|
| Test Model | 802.11n(VHT40) mode | Frequency(MHz) | 5755 |

Ant0

Ant1

| Emission Bandwidth&99% Occupied Bandwidth | | UNII Band III | |
|---|---|---|---|
| Test Model | 802.11n(VHT40) mode | Frequency(MHz) | 5795 |

Ant0

Ant1

| Emission Bandwidth&99% Occupied Bandwidth | | UNII Band I | |
|---|---|---|---|
| Test Model | 802.11ac(VHT40) mode | Frequency(MHz) | 5190 |

Ant0

Ant1

| Emission Bandwidth&99% Occupied Bandwidth | | UNII Band I | |
|---|---|---|---|
| Test Model | 802.11ac(VHT40) mode | Frequency(MHz) | 5230 |

Ant0

Ant1

| Emission Bandwidth&99% Occupied Bandwidth | | UNII Band II-A | |
|---|---|---|---|
| Test Model | 802.11ac(VHT40) mode | Frequency(MHz) | 5270 |

Ant0

Ant1

| Emission Bandwidth&99% Occupied Bandwidth | | UNII Band II-A | |
|---|---|---|---|
| Test Model | 802.11ac(VHT40) mode | Frequency(MHz) | 5310 |

Ant0

Ant1

| Emission Bandwidth&99% Occupied Bandwidth | | UNII Band II-C | |
|---|---|---|---|
| Test Model | 802.11ac(VHT40) mode | Frequency(MHz) | 5510 |

Ant0

Ant1

| Emission Bandwidth&99% Occupied Bandwidth | | UNII Band II-C | |
|---|---|---|---|
| Test Model | 802.11ac(VHT40) mode | Frequency(MHz) | 5590 |

Ant0

Ant1

| Emission Bandwidth&99% Occupied Bandwidth | | UNII Band II-C | |
|---|---|---|---|
| Test Model | 802.11ac(VHT40) mode | Frequency(MHz) | 5670 |

Ant0

Ant1

| Emission Bandwidth&99% Occupied Bandwidth | | UNII Band III | |
|---|---|---|---|
| Test Model | 802.11ac(VHT40) mode | Frequency(MHz) | 5755 |

Ant0

Ant1

| Emission Bandwidth&99% Occupied Bandwidth | | UNII Band III | |
|---|---|---|---|
| Test Model | 802.11ac(VHT40) mode | Frequency(MHz) | 5795 |

Ant0

Ant1

| Emission Bandwidth&99% Occupied Bandwidth | | UNII Band I | |
|---|---|---|---|
| Test Model | 802.11ac(VHT80) mode | Frequency(MHz) | 5210 |

Ant0

Ant1

| Emission Bandwidth&99% Occupied Bandwidth | | UNII Band II-A | |
|---|---|---|---|
| Test Model | 802.11ac(VHT80) mode | Frequency(MHz) | 5290 |

Ant0

Ant1

| Emission Bandwidth&99% Occupied Bandwidth | | UNII Band II-C | |
|---|---|---|---|
| Test Model | 802.11ac(VHT80) mode | Frequency(MHz) | 5530 |

Ant0

Ant1

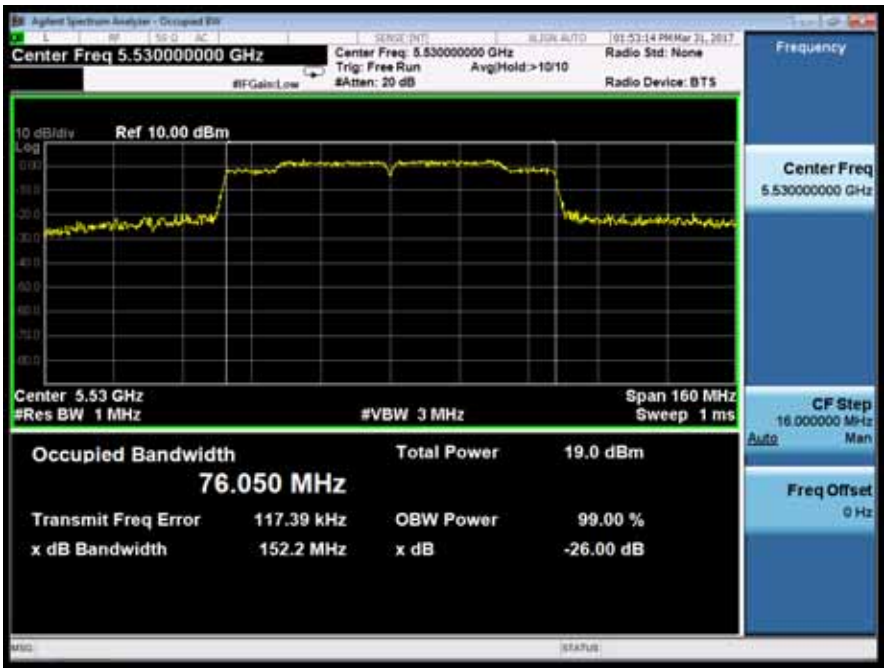

| Emission Bandwidth&99% Occupied Bandwidth | | UNII Band II-C | |
|---|---|---|---|
| Test Model | 802.11ac(VHT80) mode | Frequency(MHz) | 5610 |

Ant0

Ant1

| Emission Bandwidth&99% Occupied Bandwidth | | UNII Band III | |
|---|---|---|---|
| Test Model | 802.11ac(VHT80) mode | Frequency(MHz) | 5775 |

Ant0

Ant1

| Minimum Emission Bandwidth | | UNII Band III | |
|---|---|---|---|
| Test Model | 802.11a mode | Frequency(MHz) | 5745 |

Ant0

Ant1

| Minimum Emission Bandwidth | | UNII Band III | |
|---|---|---|---|
| Test Model | 802.11a mode | Frequency(MHz) | 5785 |

Ant0

Ant1

| Minimum Emission Bandwidth | | UNII Band III | |
|---|---|---|---|
| Test Model | 802.11a mode | Frequency(MHz) | 5825 |

Ant0

Ant1

| Minimum Emission Bandwidth | | UNII Band III | |
|---|---|---|---|
| Test Model | 802.11n(VHT20) mode | Frequency(MHz) | 5745 |

Ant0

Ant1

| Minimum Emission Bandwidth | | UNII Band III | |
|---|---|---|---|
| Test Model | 802.11n(VHT20) mode | Frequency(MHz) | 5785 |

Ant0

Ant1

| Minimum Emission Bandwidth | | UNII Band III | |
|---|---|---|---|
| Test Model | 802.11n(VHT20) mode | Frequency(MHz) | 5825 |

Ant0

Ant1

| Minimum Emission Bandwidth | | UNII Band III | |
|---|---|---|---|
| Test Model | 802.11ac(VHT20) mode | Frequency(MHz) | 5745 |

Ant0

Ant1

| Minimum Emission Bandwidth | | UNII Band III | |
|---|---|---|---|
| Test Model | 802.11ac(VHT20) mode | Frequency(MHz) | 5785 |

Ant0

Ant1

| Minimum Emission Bandwidth | | UNII Band III | |
|---|---|---|---|
| Test Model | 802.11ac(VHT20) mode | Frequency(MHz) | 5825 |

Ant0

Ant1

| Minimum Emission Bandwidth | | UNII Band III | |
|---|---|---|---|
| Test Model | 802.11n(VHT40) mode | Frequency(MHz) | 5755 |

Ant0

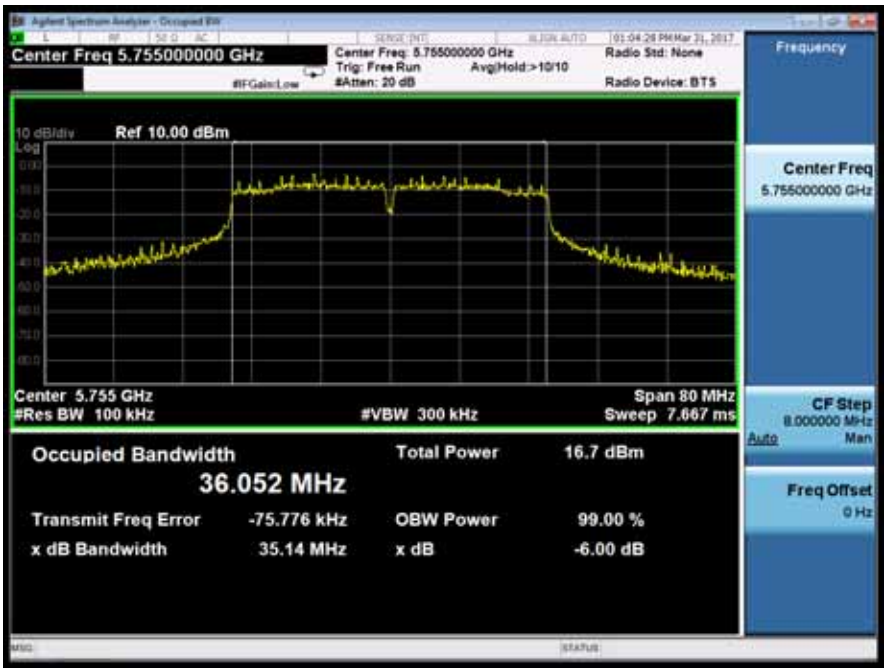


Ant1

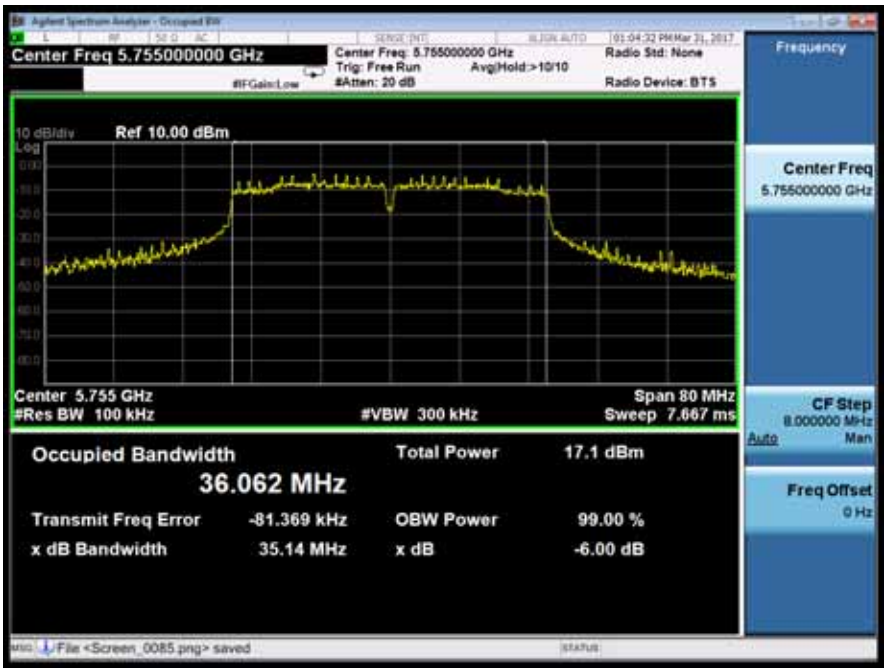

| Minimum Emission Bandwidth | | UNII Band III | |
|---|---|---|---|
| Test Model | 802.11n(VHT40) mode | Frequency(MHz) | 5795 |

Ant0

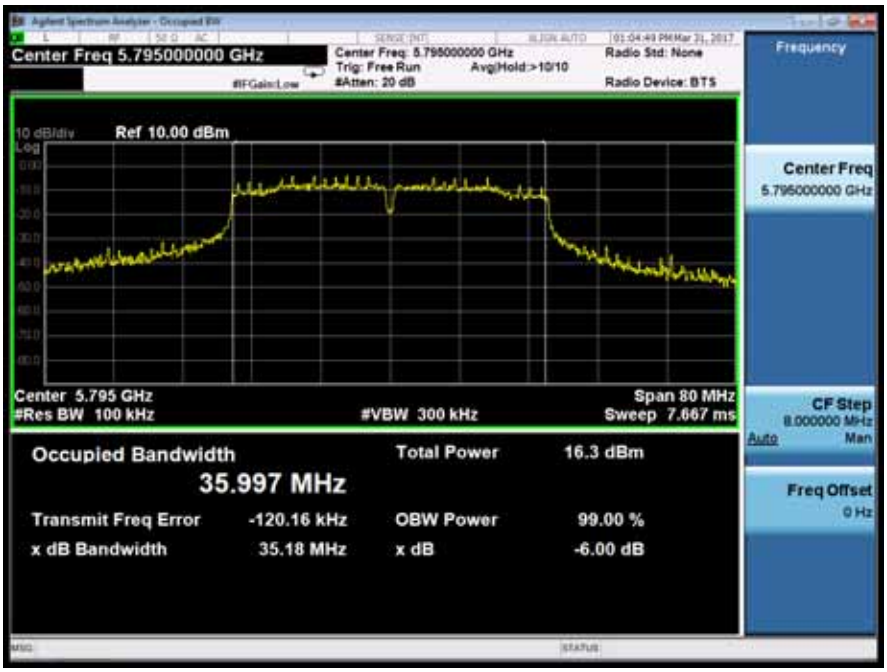


Ant1

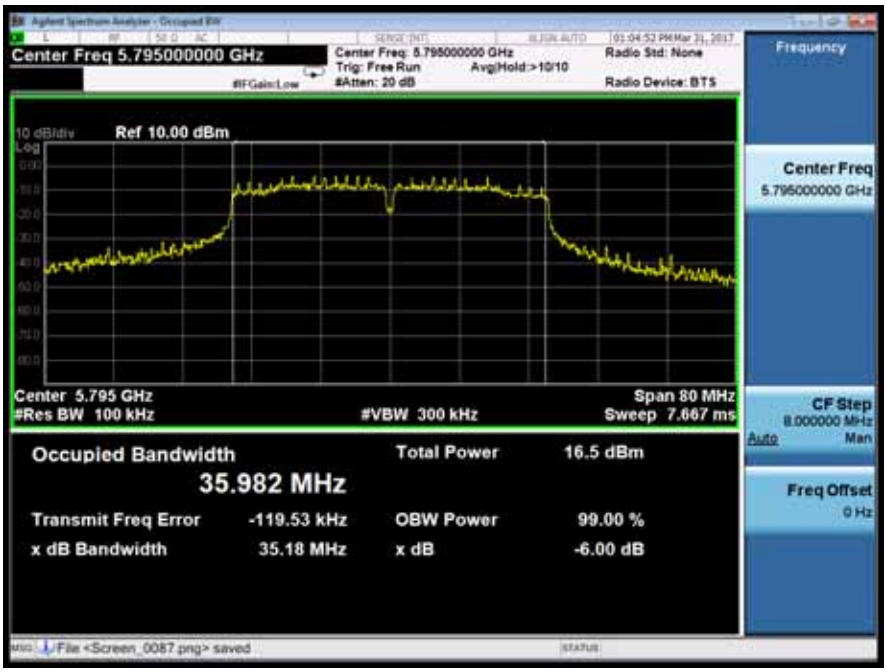

| Minimum Emission Bandwidth | | UNII Band III | |
|---|---|---|---|
| Test Model | 802.11ac(VHT40) mode | Frequency(MHz) | 5755 |

Ant0

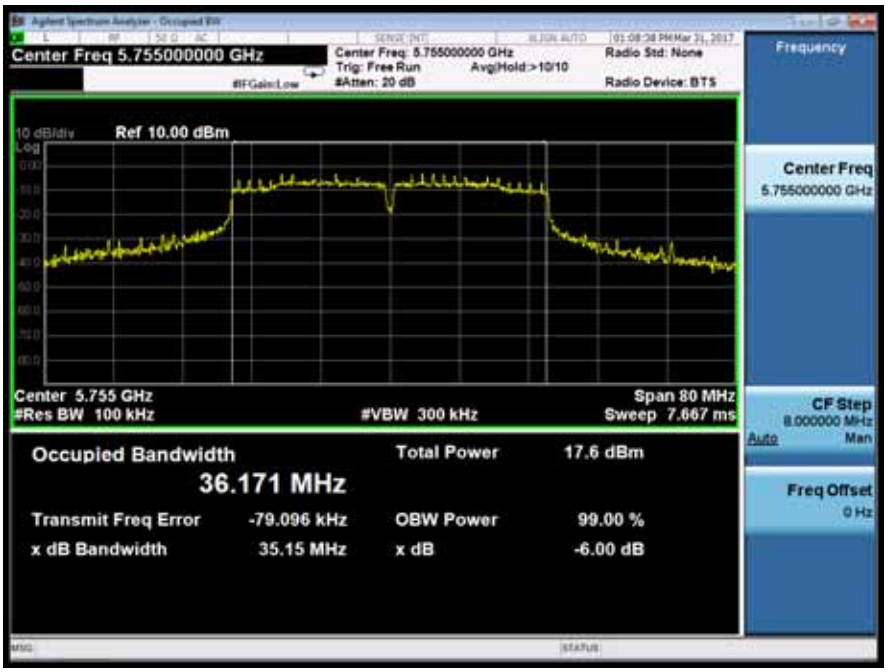


Ant1

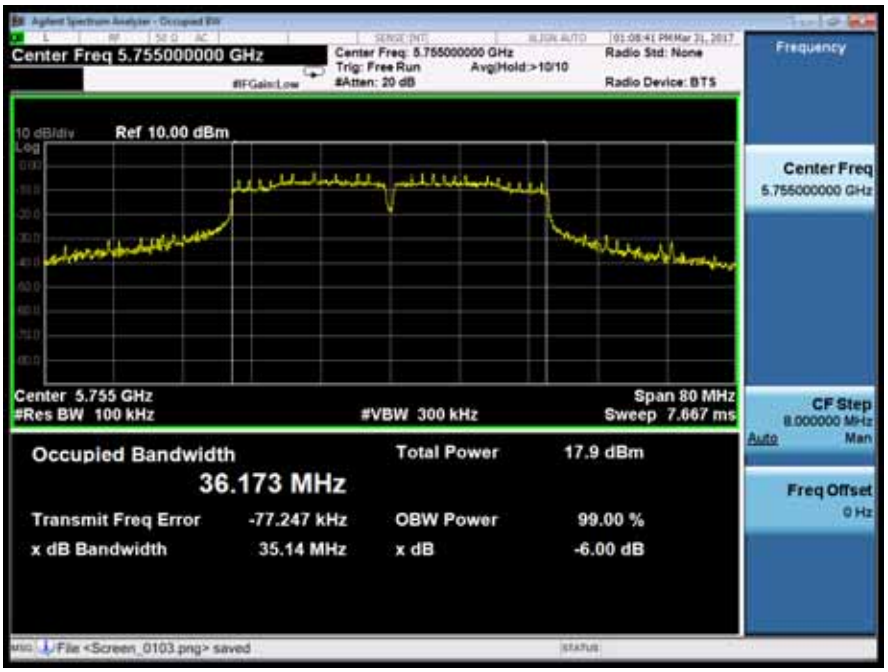

| Minimum Emission Bandwidth | | UNII Band III | |
|---|---|---|---|
| Test Model | 802.11ac(VHT40) mode | Frequency(MHz) | 5795 |

Ant0

Ant1

| Minimum Emission Bandwidth | | UNII Band III | |
|---|---|---|---|
| Test Model | 802.11ac(VHT80) mode | Frequency(MHz) | 5775 |

Ant0

Ant1

## 8.2 MAXIMUM CONDUCTED OUTPUT POWER

### 8.2.1 Applicable Standard

According to FCC Part 15.407(a)(1) for UNII Band I
According to FCC Part 15.407(a)(2) for UNII Band II-A and UNII Band II-C
According to FCC Part 15.407(a)(3) for UNII Band III
According to 789033 D02 Section II(E)

### 8.2.2 Conformance Limit

- For the band 5.15-5.25 GHz,

(a) (1) (i) For an outdoor access point operating in the band 5.15-5.25 GHz, the maximum conducted output power over the frequency band of operation shall not exceed 1 W provided the maximum antenna gain does not exceed 6 dBi. If transmitting antennas of directional gain greater than 6 dBi are used, both the maximum conducted output power and the maximum power spectral density shall be reduced by the amount in dB that the directional gain of the antenna exceeds 6 dBi. The maximum e.i.r.p. at any elevation angle above 30 degrees as measured from the horizon must not exceed 125 mW (21 dBm).
(a) (1) (ii) For an indoor access point operating in the band 5.15-5.25 GHz, the maximum conducted output power over the frequency band of operation shall not exceed 1 W provided the maximum antenna gain does not exceed 6 dBi. If transmitting antennas of directional gain greater than 6 dBi are used, both the maximum conducted output power and the maximum power spectral density shall be reduced by the amount in dB that the directional gain of the antenna exceeds 6 dBi.
(a) (1) (iii) For fixed point-to-point access points operating in the band 5.15-5.25 GHz, the maximum conducted output power over the frequency band of operation shall not exceed 1 W. Fixed point-to-point U-NII devices may employ antennas with directional gain up to 23 dBi without any corresponding reduction in the maximum conducted output power or maximum power spectral density. For fixed point-to-point transmitters that employ a directional antenna gain greater than 23 dBi, a 1 dB reduction in maximum conducted output power and maximum power spectral density is required for each 1 dB of antenna gain in excess of 23 dBi. Fixed, point-to-point operations exclude the use of point-to-multipoint systems, omnidirectional applications, and multiple collocated transmitters transmitting the same information. The operator of the U-NII device, or if the equipment is professionally installed, the installer, is responsible for ensuring that systems employing high gain directional antennas are used exclusively for fixed, point-to-point operations.
(a) (1) (iv) For mobile and portable client devices in the 5.15-5.25 GHz band, the maximum conducted output power over the frequency band of operation shall not exceed 250 mW provided the maximum antenna gain does not exceed 6 dBi. If transmitting antennas of directional gain greater than 6 dBi are used, both the maximum conducted output power and the maximum power spectral density shall be reduced by the amount in dB that the directional gain of the antenna exceeds 6 dBi.

- For the 5.25-5.35 GHz and 5.47-5.725 GHz bands

(a) (2) the maximum conducted output power over the frequency bands of operation shall not exceed the lesser of 250 mW or 11 dBm + 10 log B, where B is the 26 dB emission bandwidth in megahertz. In addition, the maximum power spectral density shall not exceed 11 dBm in any 1 megahertz band. If transmitting antennas of directional gain greater than 6 dBi are used, both the maximum conducted output power and the maximum power spectral density shall be reduced by the amount in dB that the directional gain of the antenna exceeds 6 dBi.

- For the band 5.725-5.85 GHz

(a) (3)For the band 5.725-5.85 GHz, the maximum conducted output power over the frequency band of operation shall not exceed 1 W. In addition, the maximum power spectral density shall not exceed 30 dBm in any 500-kHz band. If transmitting antennas of directional gain greater than 6 dBi are used, both the maximum conducted output power and the maximum power spectral density shall be reduced by the amount in dB that the directional gain of the antenna exceeds 6 dBi.

### 8.2.3 Test Configuration

Test according to clause 6.1 radio frequency test setup

### 8.2.4 Test Procedure

The maximum average conducted output power can be measured using Method PM-G (Measurement using

a gated RF average power meter):
Measurements may be performed using a wideband gated RF power meter provided that the gate parameters are adjusted such that the power is measured only when the EUT is transmitting at its maximum power control level. Since the measurement is made only during the ON time of the transmitter, no duty cycle correction factor is required.

a. The Transmitter output (antenna port) was connected to the power meter.
b. Turn on the EUT and power meter and then record the power value.
c. Repeat above procedures on all channels needed to be tested.

8.2.5 Test Results

| ☒ 802.11a mode | | | |
|---|---|---|---|
| Temperature : | 28℃ | Test Date : | March 31, 2017 |
| Humidity : | 65 % | Test By: | King Kong |

| Band | Channel Number | Channel Freq. (MHz) | Conducted Output Power(dBm) | | Limit (dBm) | Verdict |
|---|---|---|---|---|---|---|
| | | | Ant0 | Ant1 | | |
| UNII Band I | CH36 | 5180 | 10.23 | 11.02 | 24.0 | Pass |
| | CH40 | 5200 | 11.34 | 11.29 | 24.0 | Pass |
| | CH48 | 5240 | 12.72 | **13.80** | 24.0 | Pass |
| UNII Band II-A | CH52 | 5260 | 12.06 | 13.05 | 24.0 | Pass |
| | CH56 | 5280 | 11.63 | 11.60 | 24.0 | Pass |
| | CH64 | 5320 | **13.34** | 13.32 | 24.0 | Pass |
| UNII Band II-C | CH100 | 5500 | 12.95 | 12.95 | 24.0 | Pass |
| | CH120 | 5600 | **14.04** | 14.03 | 24.0 | Pass |
| | CH140 | 5700 | 13.69 | 13.65 | 24.0 | Pass |
| UNII Band III | CH149 | 5745 | 11.77 | 10.98 | 30.0 | Pass |
| | CH157 | 5785 | **12.35** | 12.29 | 30.0 | Pass |
| | CH165 | 5825 | 9.63 | 9.61 | 30.0 | Pass |
| Note:<br>N/A (Not Applicable) | | | | | | |

| ☒ 802.11n(VHT20) mode | | | |
|---|---|---|---|
| Temperature : | 28℃ | Test Date : | March 31, 2017 |
| Humidity : | 65 % | Test By: | King Kong |

| Band | Channel Number | Channel Freq. (MHz) | Conducted Output Power(dBm) | | Limit (dBm) | Verdict |
|---|---|---|---|---|---|---|
| | | | Ant0 | Ant1 | | |
| UNII Band I | CH36 | 5180 | 9.10 | 9.12 | 24.0 | Pass |
| | CH40 | 5200 | 8.96 | 8.95 | 24.0 | Pass |
| | CH48 | 5240 | 10.90 | 11.70 | 24.0 | Pass |
| UNII Band II-A | CH52 | 5260 | 9.94 | 9.91 | 24.0 | Pass |
| | CH56 | 5280 | 9.60 | 9.54 | 24.0 | Pass |
| | CH64 | 5320 | 11.40 | 12.05 | 24.0 | Pass |
| UNII Band II-C | CH100 | 5500 | 12.11 | 12.10 | 24.0 | Pass |
| | CH120 | 5600 | 12.65 | 13.50 | 24.0 | Pass |
| | CH140 | 5700 | 12.70 | 13.25 | 24.0 | Pass |
| UNII Band III | CH149 | 5745 | 10.86 | 11.40 | 30.0 | Pass |
| | CH157 | 5785 | 11.38 | 11.92 | 30.0 | Pass |
| | CH165 | 5825 | 8.72 | 9.25 | 30.0 | Pass |

☒ 802.11ac(VHT20) mode

| | | | |
|---|---|---|---|
| Temperature : | 28℃ | Test Date : | March 31, 2017 |
| Humidity : | 65 % | Test By: | King Kong |

| Band | Channel Number | Channel Freq. (MHz) | Conducted Output Power(dBm) | | Limit (dBm) | Verdict |
|---|---|---|---|---|---|---|
| | | | Ant0 | Ant1 | | |
| UNII Band I | CH36 | 5180 | 9.02 | 9.02 | 24.0 | Pass |
| | CH40 | 5200 | 9.23 | 10.08 | 24.0 | Pass |
| | CH48 | 5240 | 10.80 | 10.67 | 24.0 | Pass |
| UNII Band II-A | CH52 | 5260 | 10.66 | 9.95 | 24.0 | Pass |
| | CH56 | 5280 | 10.23 | 10.22 | 24.0 | Pass |
| | CH64 | 5320 | 11.36 | 11.33 | 24.0 | Pass |
| UNII Band II-C | CH100 | 5500 | 11.80 | 11.80 | 24.0 | Pass |
| | CH120 | 5600 | 12.65 | 13.36 | 24.0 | Pass |
| | CH140 | 5700 | 12.68 | 13.24 | 24.0 | Pass |
| UNII Band III | CH149 | 5745 | 10.82 | 10.79 | 30.0 | Pass |
| | CH157 | 5785 | 11.34 | 11.91 | 30.0 | Pass |
| | CH165 | 5825 | 8.98 | 9.57 | 30.0 | Pass |

☒ 802.11n(VHT40) mode

| | | | |
|---|---|---|---|
| Temperature : | 28℃ | Test Date : | March 31, 2017 |
| Humidity : | 65 % | Test By: | King Kong |

| Band | Channel Number | Channel Freq. (MHz) | Conducted Output Power(dBm) | | Limit (dBm) | Verdict |
|---|---|---|---|---|---|---|
| | | | Ant0 | Ant1 | | |
| UNII Band I | CH38 | 5190 | 7.95 | 9.37 | 24.0 | Pass |
| | CH46 | 5230 | 10.28 | 11.16 | 24.0 | Pass |
| UNII Band II-A | CH54 | 5270 | 9.76 | 9.75 | 24.0 | Pass |
| | CH62 | 5310 | 11.05 | 11.55 | 24.0 | Pass |
| UNII Band II-C | CH102 | 5510 | 11.96 | 12.50 | 24.0 | Pass |
| | CH118 | 5590 | 12.27 | 12.24 | 24.0 | Pass |
| | CH134 | 5670 | 11.77 | 11.78 | 24.0 | Pass |
| UNII Band III | CH151 | 5755 | 10.79 | 11.13 | 30.0 | Pass |
| | CH159 | 5795 | 10.65 | 11.20 | 30.0 | Pass |

☒ 802.11ac(VHT40) mode

| | | | |
|---|---|---|---|
| Temperature : | 28℃ | Test Date : | March 31, 2017 |
| Humidity : | 65 % | Test By: | King Kong |

| Band | Channel Number | Channel Freq. (MHz) | Conducted Output Power(dBm) | | Limit (MHz) | Verdict |
|---|---|---|---|---|---|---|
| | | | Ant0 | Ant1 | | |
| UNII Band I | CH38 | 5190 | 8.38 | 8.32 | 24.0 | Pass |
| | CH46 | 5230 | 10.16 | 10.12 | 24.0 | Pass |
| UNII Band II-A | CH54 | 5270 | 9.62 | 9.60 | 24.0 | Pass |
| | CH62 | 5310 | 10.79 | 10.53 | 24.0 | Pass |
| UNII Band II-C | CH102 | 5510 | 12.19 | 12.18 | 24.0 | Pass |
| | CH118 | 5590 | 12.23 | 13.05 | 24.0 | Pass |
| | CH134 | 5670 | 12.03 | 11.76 | 24.0 | Pass |
| UNII Band III | CH151 | 5755 | 11.62 | 11.65 | 30.0 | Pass |
| | CH159 | 5795 | 9.84 | 11.46 | 30.0 | Pass |

☒ 802.11ac(VHT80) mode

| | | | |
|---|---|---|---|
| Temperature : | 28℃ | Test Date : | March 31, 2017 |
| Humidity : | 65 % | Test By: | King Kong |

| Band | Channel Number | Channel Freq. (MHz) | Conducted Output Power(dBm) | | Limit (dBm) | Verdict |
|---|---|---|---|---|---|---|
| | | | Ant0 | Ant1 | | |
| UNII Band I | CH42 | 5210 | 9.28 | 10.73 | 24.0 | Pass |
| UNII Band II-A | CH58 | 5290 | 8.80 | 9.51 | 24.0 | Pass |
| UNII Band II-C | CH106 | 5530 | 11.80 | 11.77 | 24.0 | Pass |
| | CH122 | 5610 | 12.39 | 12.38 | 24.0 | Pass |
| UNII Band III | CH155 | 5775 | 10.97 | 10.91 | 30.0 | Pass |
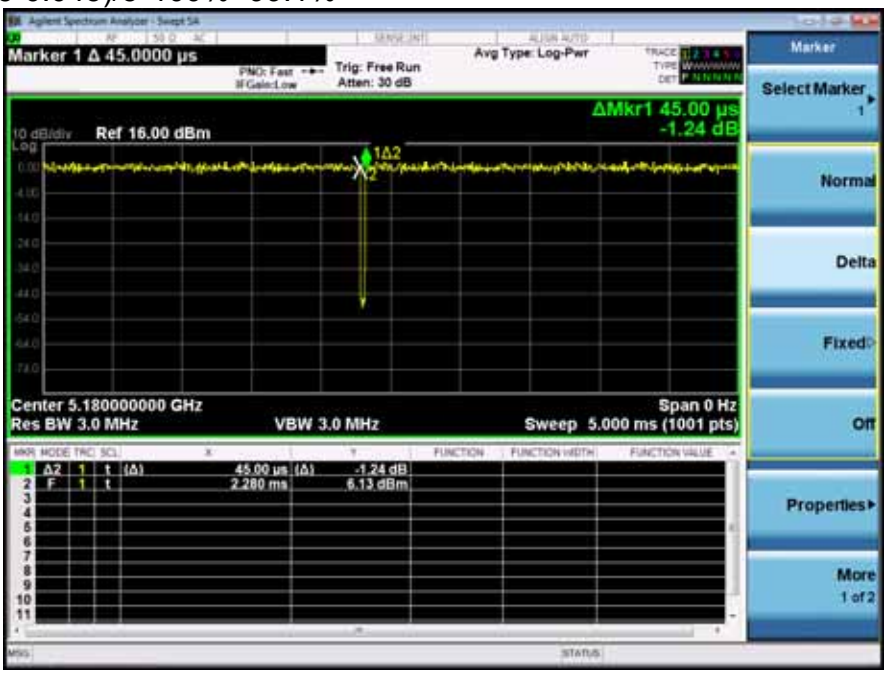
Duty cycle=(5-0.045)/5*100%=99.1%