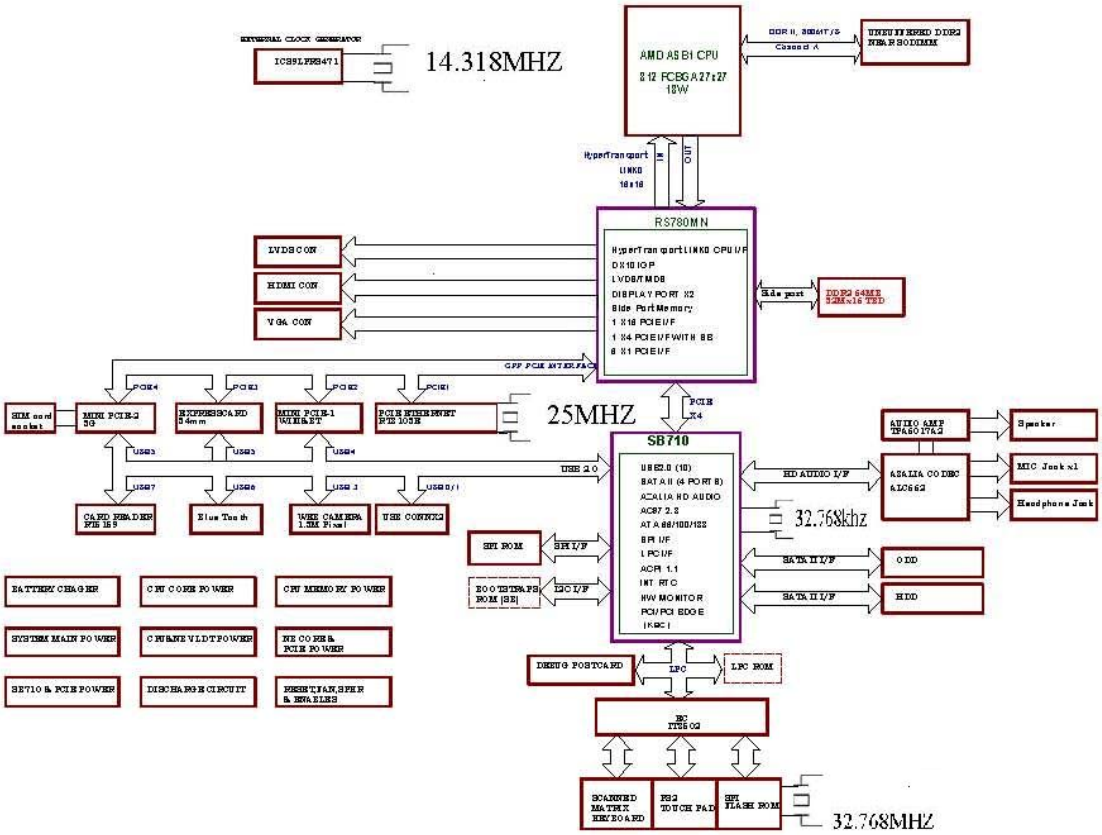
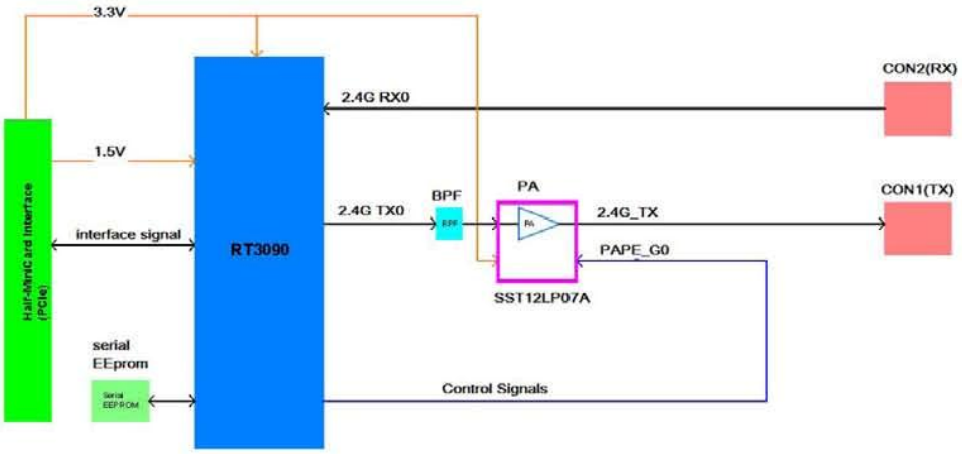
Major Chipset Ralink RT3090