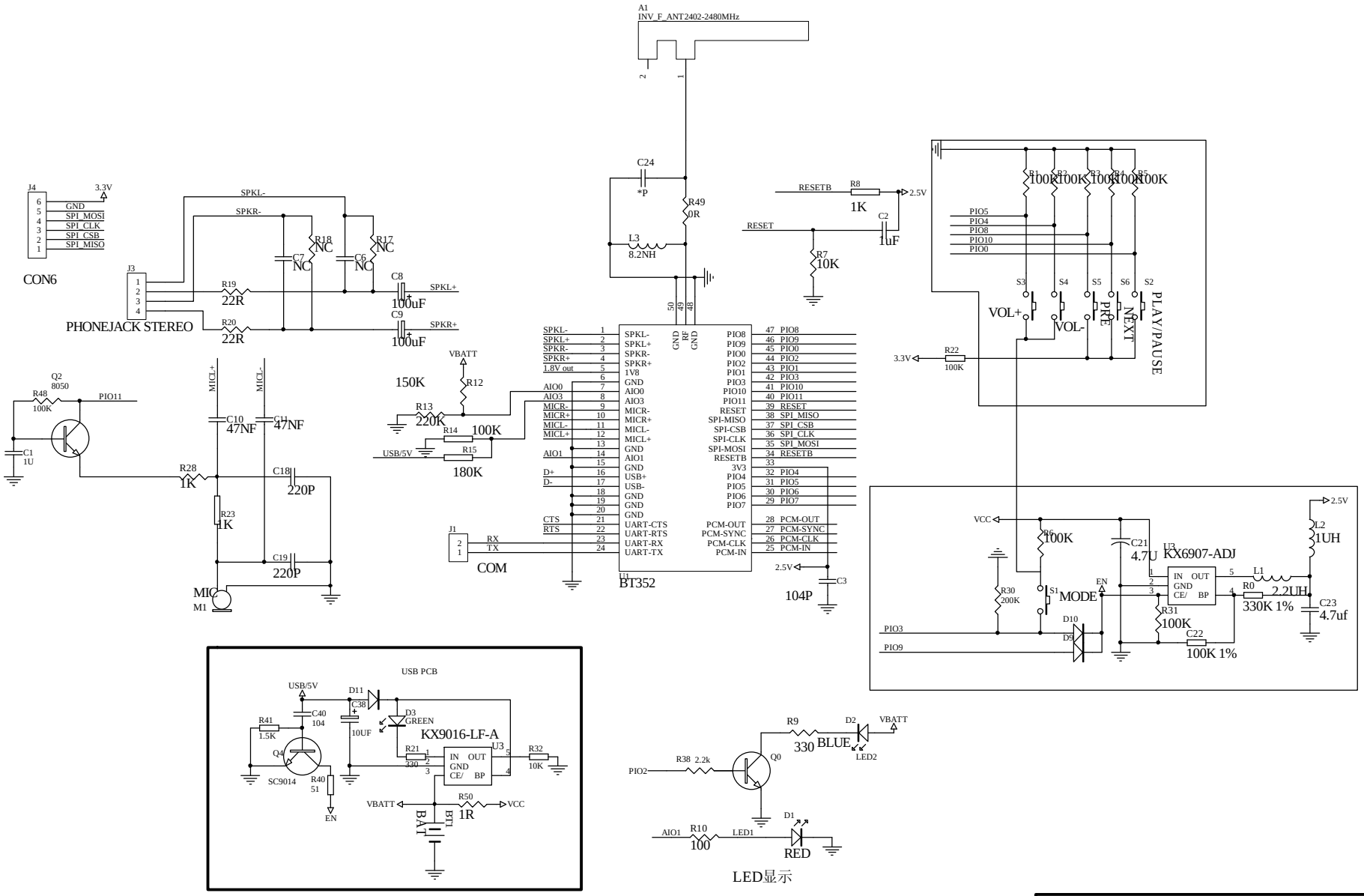

中锘基电器制造有限公司			
Description :	WIRELESS BLUETOOTH HEADSET		
Mode :	Z-W88	Drawing By :	CZP
Revision :	A/0	Size :	Checked By :
Date :	26-MAY-06	Sheet 1 of 1	Approved By :

PDF created with pdfFactory Pro trial version www.pdffactory.com