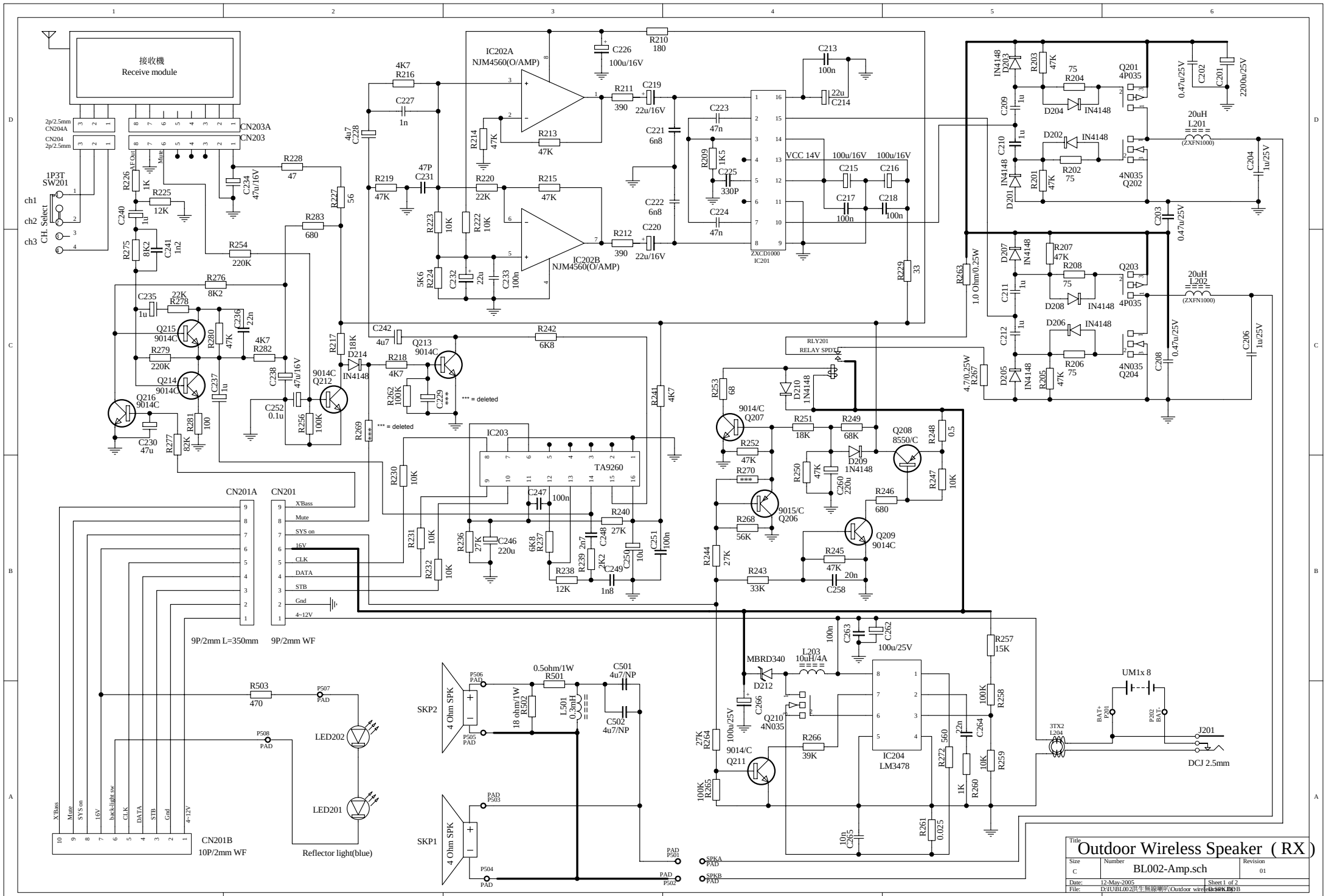
接收機
Receive module
CN203A
CN203
CN204A
CN204
1P3T
SW201
ch1
ch2
ch3
CH. Select
IC202A
NJM4560(O/AMP)
IC202B
NJM4560(O/AMP)
ZXCD1000
IC201
VCC 14V
IC203
TA9260
CN201A
CN201
9P/2mm L=350mm
9P/2mm WF
CN201B
10P/2mm WF
Reflector light(blue)
LED202
LED201
SKP2
SKP1
4 Ohm SPK
IC204
LM3478
MBRD340
RLY201
RELAY SPDT
*** = deleted
UM1x 8
DCJ 2.5mm
J201
Outdoor Wireless Speaker (RX)
BL002-Amp.sch
Size
C
Number
Revision
01
Date:
12-May-2005
Sheet 1 of 2
File:
D:\IU\BL002共生無線喇叭\Outdoor wireless SPK.DDB

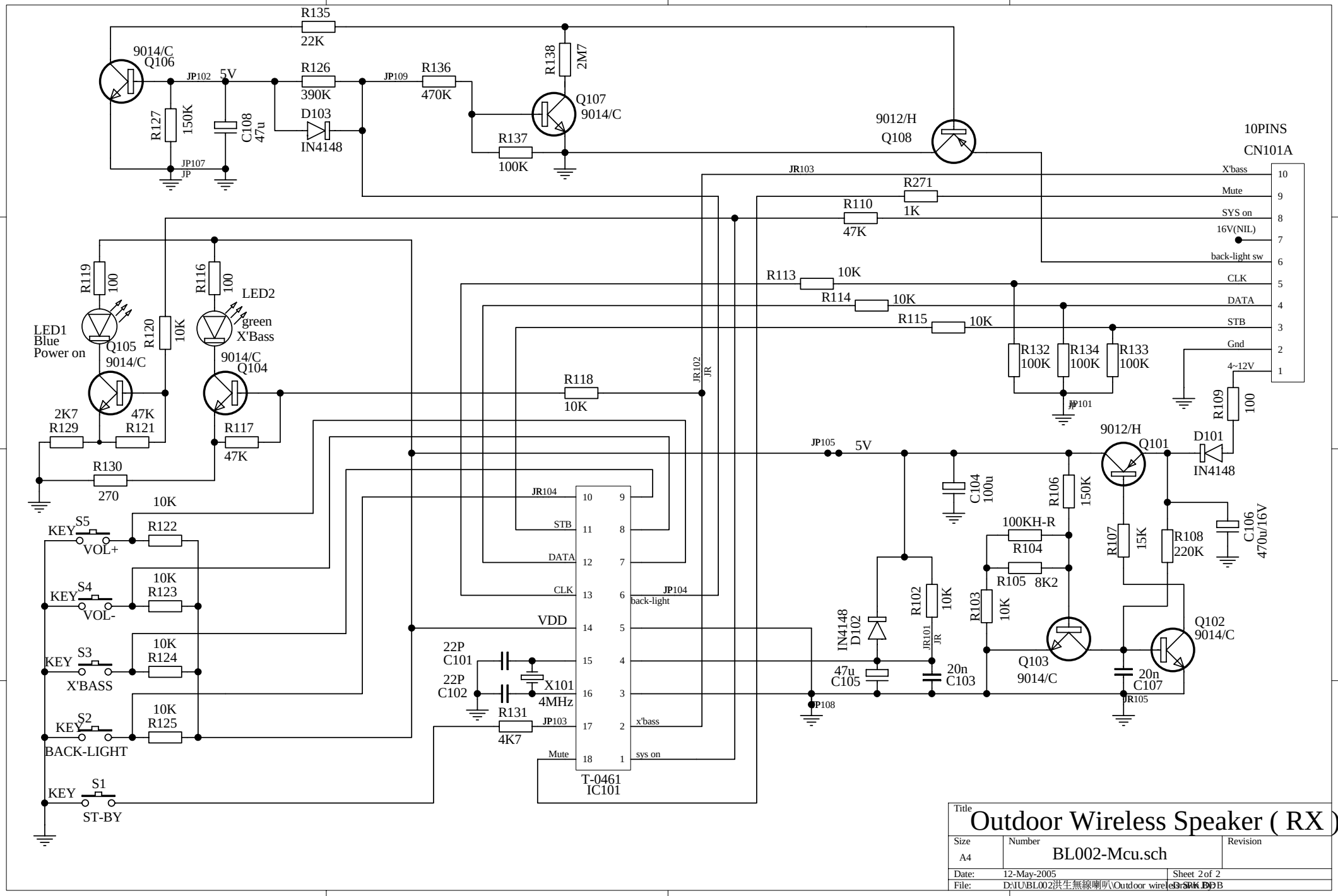
R135
22K
9014/C
Q106
JP102
5V
R126
390K
JP109
R136
470K
R138
2M7
Q107
9014/C
R127
150K
C108
47u
D103
IN4148
R137
100K
JP107
JP
9012/H
Q108
10PINS
CN101A
JR103
R271
1K
R110
47K
X'bass
Mute
SYS on
16V(NIL)
back-light sw
CLK
DATA
STB
Gnd
4~12V
R119
100
R116
100
LED2
green
X'Bass
LED1
Blue
Power on
Q105
9014/C
R120
10K
Q104
9014/C
R113
10K
R114
10K
R115
10K
R132
100K
R134
100K
R133
100K
JP101
R118
10K
JR102
JR
R109
100
2K7
R129
47K
R121
R117
47K
R130
270
JP105
5V
9012/H
Q101
D101
IN4148
C104
100u
R106
150K
C106
470u/16V
10K
JR104
STB
DATA
CLK
VDD
JP104
back-light
100KH-R
R104
R105
8K2
R107
15K
R108
220K
S5
KEY
VOL+
R122
S4
KEY
VOL-
10K
R123
S3
KEY
X'BASS
10K
R124
S2
KEY
BACK-LIGHT
10K
R125
S1
KEY
ST-BY
22P
C101
22P
C102
X101
4MHz
R131
4K7
JP103
x'bass
sys on
Mute
T-0461
IC101
IN4148
D102
R102
10K
JR101
JR
R103
10K
47u
C105
20n
C103
JP108
Q103
9014/C
Q102
9014/C
20n
C107
JR105
Title
Outdoor Wireless Speaker (RX)
Size
A4
Number
BL002-Mcu.sch
Revision
Date:
12-May-2005
Sheet 2of 2
File:
D:\IU\BL002洪生無線喇叭\Outdoor wireless speaker.DDB

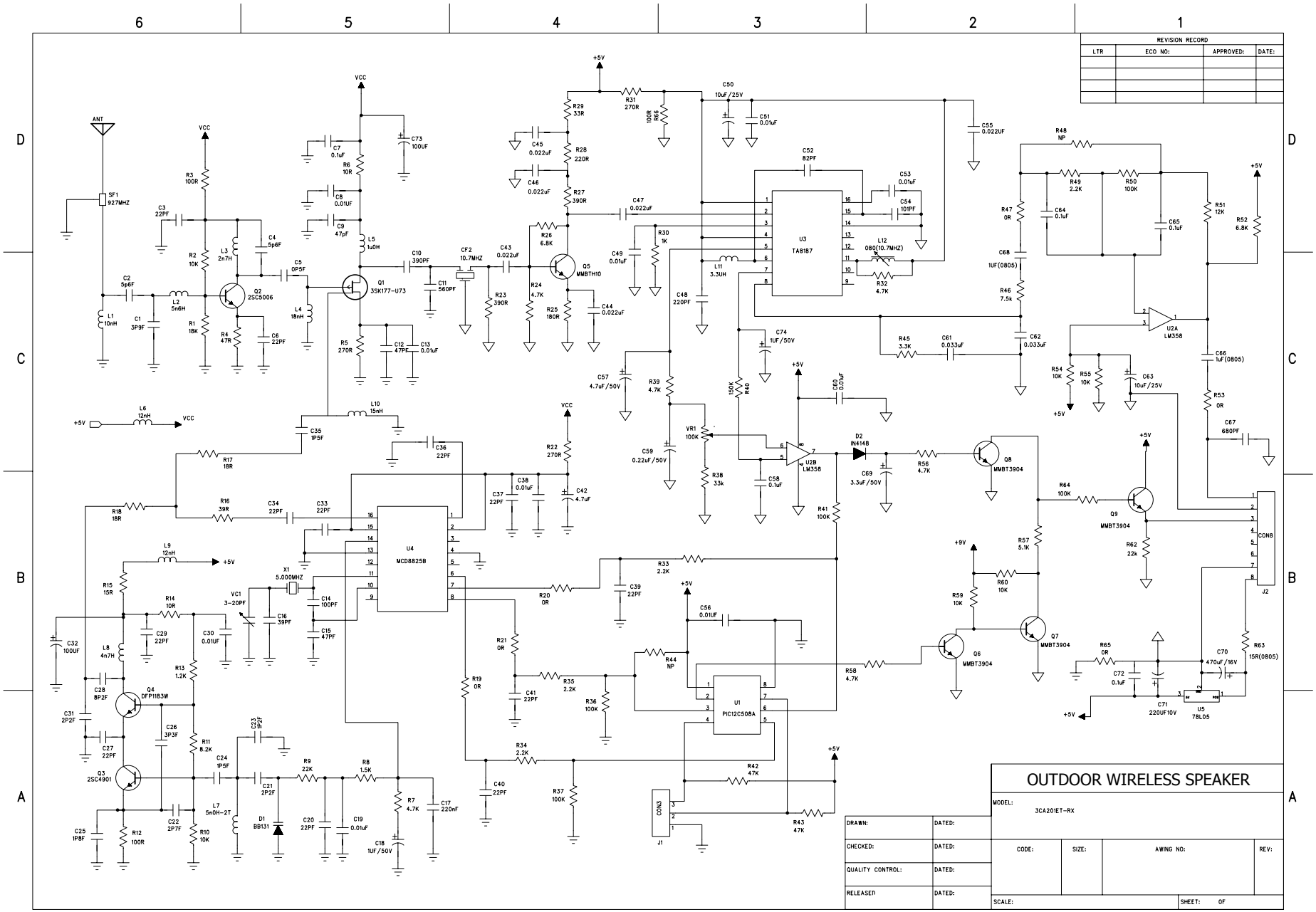
REVISION RECORD
LTR
ECO NO:
APPROVED:
DATE:
OUTDOOR WIRELESS SPEAKER
MODEL:
3CA201ET-RX
DRAWN:
DATED:
CHECKED:
DATED:
QUALITY CONTROL:
DATED:
RELEASED
DATED:
CODE:
SIZE:
AWING NO:
REV:
SCALE:
SHEET: OF
ANT
SF1 927MHZ
VCC
+5V
U3 TA8187
U4 MCD8825B
U1 PIC12C508A
U2A LM358
U2B LM358
Q1 3SK177-U73
Q2 2SC5006
Q3 2SC4901
Q4 DFP1183W
Q5 MMBTH10
Q6 MMBT3904
Q7 MMBT3904
Q8 MMBT3904
Q9 MMBT3904
D1 BB131
D2 IN414B
X1 5.000MHZ
CF2 10.7MHZ
L12 080(10.7MHZ)
CON8
J2
CON3
J1
U5 78L05