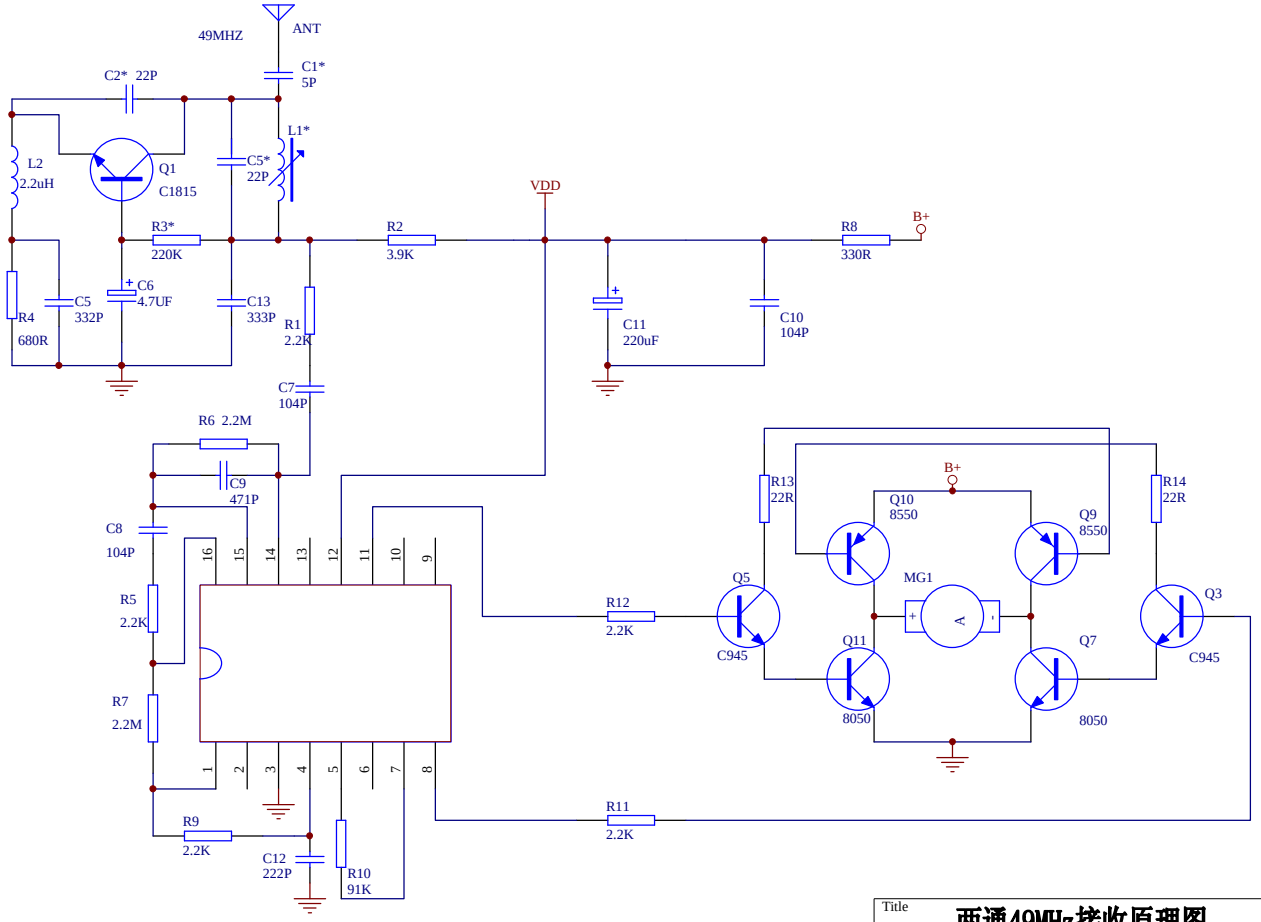

Title	两通49MHz接收原理图		
Size A4	Number 2		Revision :01
Date:	14-Sep-2007	Sheet of	1 of 1
File:	D:\焊煌气\ 痈盟線.Ddb	Drawn By:	LICHONGFA