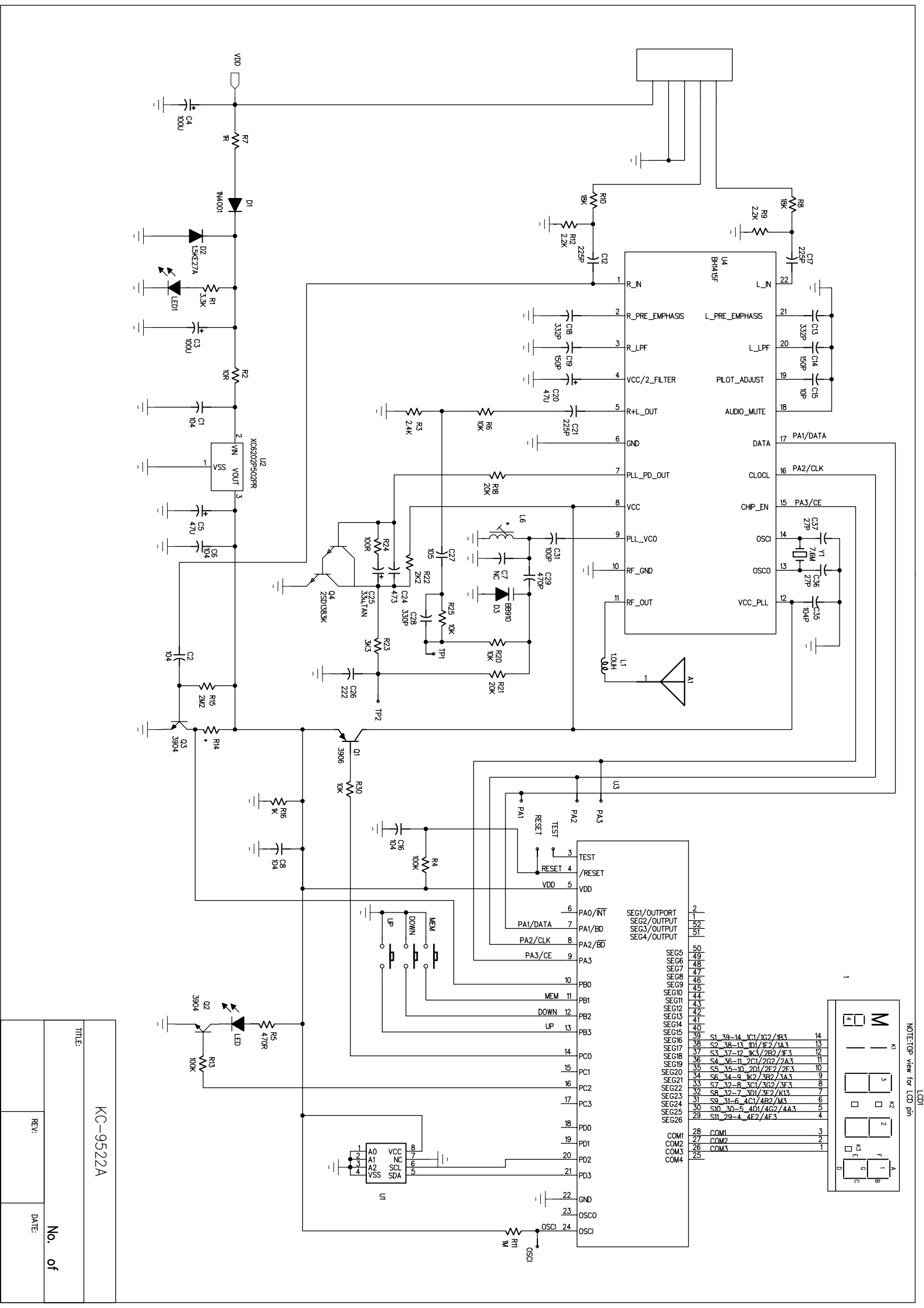
VDD
C4 100U
R7 1R
D1 1N4001
D2 1.5KE27A
LED1
R1 3.3K
C3 100U
R2 10R
C1 104
U2 XC6202P502PR
VIN VOUT VSS
C5 47U
C6 104
Q4 2SD1383K
R24 100R
C25 33uTAN
C24 473
C27 105
R22 2K2
C28 330P
R25 10K
TP1
R23 3K3
C26 222
TP2
C2 104
R15 2M2
Q3 3904
R14 *
Q1 3906
R30 10K
R16 1K
C8 104
C16 104
R4 100K
Q2 3904
LED
R5 470R
R13 100K
R10 18K
R12 2.2K
C12 225P
R8 18K
R9 2.2K
C17 225P
U4 BH1415F
R_IN
R_PRE_EMPHASIS
R_LPF
VCC/2_FILTER
R+L_OUT
GND
PLL_PD_OUT
VCC
PLL_VCO
RF_GND
RF_OUT
L_IN
L_PRE_EMPHASIS
L_LPF
PILOT_ADJUST
AUDIO_MUTE
DATA
CLOCL
CHIP_EN
OSCI
OSCO
VCC_PLL
C18 332P
C19 150P
C20 47U
R3 2.4K
R6 10K
C21 225P
R18 20K
L6
C31 100P
C7 NC
C29 470P
D3 BB910
R20 10K
R21 20K
L1 10UH
A1
C13 332P
C14 150P
C15 10P
PA1/DATA
PA2/CLK
PA3/CE
C37 27P
Y1 7.6M
C36 27P
C35 104P
U3
PA1
RESET
TEST
PA2
PA3
TEST
/RESET
VDD
PA0/INT
PA1/BD
PA2/BD
PB0
PB1
PB2
PB3
PC0
PC1
PC2
PC3
PD0
PD1
PD2
PD3
GND
OSCO
OSCI
UP
DOWN
MEM
SEG1/OUTPORT
SEG2/OUTPUT
SEG3/OUTPUT
SEG4/OUTPUT
SEG5
SEG6
SEG7
SEG8
SEG9
SEG10
SEG11
SEG12
SEG13
SEG14
SEG15
SEG16
SEG17
SEG18
SEG19
SEG20
SEG21
SEG22
SEG23
SEG24
SEG25
SEG26
COM1
COM2
COM3
COM4
S1_39-14_1C1/1G2/1B3
S2_38-13_1D1/1E2/1A3
S3_37-12_1K3/2B2/1F3
S4_36-11_2C1/2G2/2A3
S5_35-10_2D1/2E2/2F3
S6_34-9_1K2/3B2/3A3
S7_32-8_3C1/3G2/3F3
S8_32-7_3D1/3E2/K13
S9_31-6_4C1/4B2/M3
S10_30-5_4D1/4G2/4A3
S11_29-4_4E2/4F3
U1 AO A1 A2 VSS VCC NC SCL SDA
OSCI
R11 1M
LCD1
K1
K2
K3
NOTE:TOP view for LCD pin
KC-9522A
TITLE:
REV:
DATE:
No. of