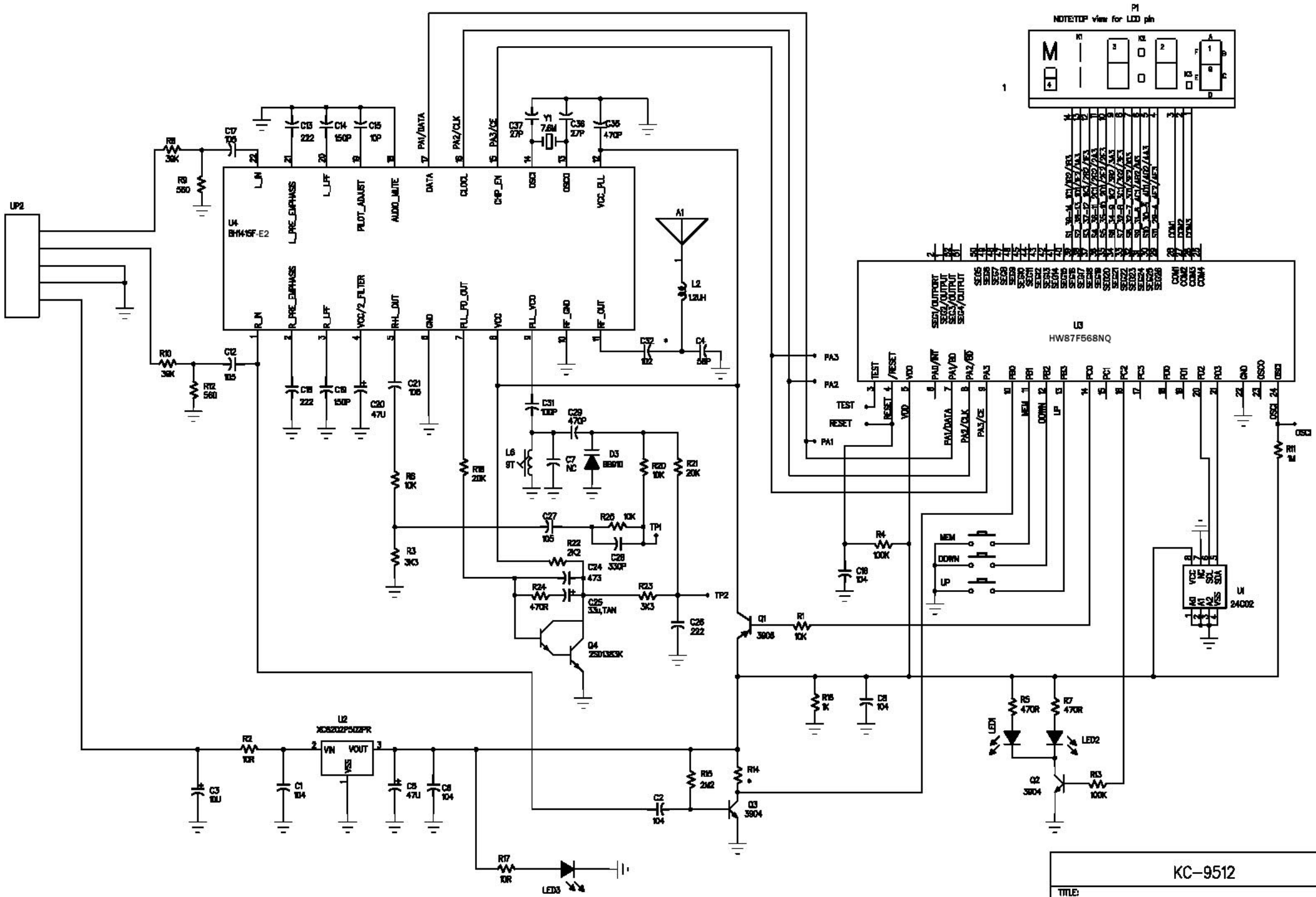

KC-9512

TITLE:

No. of

REV:

DATE: