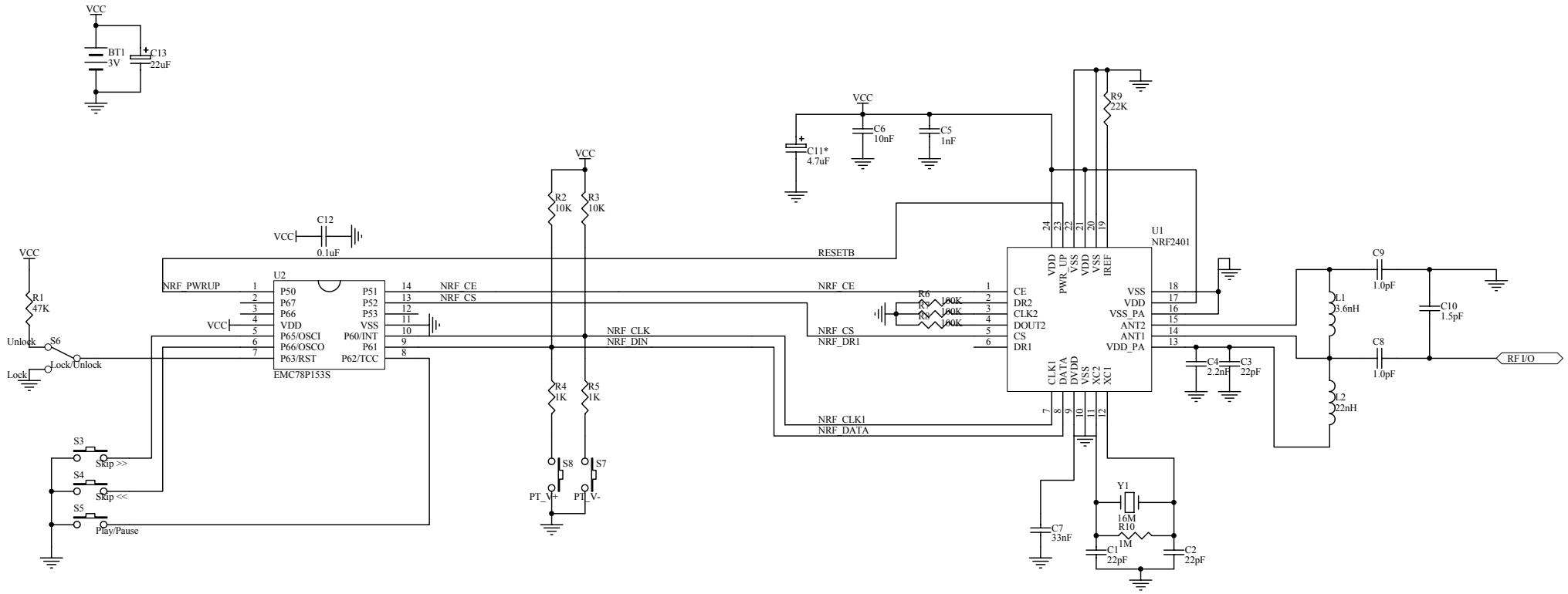

Title		
Size B	Number	Revision
Date: 9-Feb-2006		Sheet of
File: D:\wsd-pcb\kc-9313B.ddb		Drawn By: